U.S. DEPARTMENT OF ENERGY

PNNL-23273

Prepared for the U.S. Department of Energy
Under Contract DE-AC05-76RL01830

An Introduction to High Voltage dc Networks

H Kirkham
M Elizondo
J Dagle

February 2014

Pacific Northwest NATIONAL LABORATORY

Proudly Operated by Battelle Since 1965

DISCLAIMER

This documentation was prepared as an account of work sponsored by an agency of the United States Government. Neither the United States Government nor any agency thereof, nor Battelle Memorial Institute, nor any of their employees, makes **any warranty, express or implied, or assumes any legal liability or responsibility for the accuracy, completeness, or usefulness of any information, apparatus, product, or process disclosed, or represents that its use would not infringe privately owned rights**. Reference herein to any specific commercial product, process, or service by trade name, trademark, manufacturer, or otherwise does not necessarily constitute or imply its endorsement, recommendation, or favoring by the United States Government or any agency thereof, or Battelle Memorial Institute. The views and opinions of authors expressed herein do not necessarily state or reflect those of the United States Government or any agency thereof.

PACIFIC NORTHWEST NATIONAL LABORATORY
operated by
BATTELLE
for the
UNITED STATES DEPARTMENT OF ENERGY
under Contract DE-AC05-76RL01830

Printed in the United States of America

Available to DOE and DOE contractors from the
Office of Scientific and Technical Information,
P.O. Box 62, Oak Ridge, TN 37831-0062;
ph: (865) 576-8401, fax: (865) 576-5728
email: reports@adonis.osti.gov

Available to the public from the National Technical Information Service,
U.S. Department of Commerce, 5285 Port Royal Rd., Springfield, VA 22161
ph: (800) 553-6847, fax: (703) 605-6900
email: orders@ntis.fedworld.gov
online ordering: http://www.ntis.gov/ordering.htm

This document was printed on recycled paper.
(8/00)

PNNL-23273

An Introduction to High Voltage dc Networks

H Kirkham
M Elizondo
J Dagle

February 2014

Prepared for
U.S. Department of Energy
under Contract DE-AC05-76RL01830

Pacific Northwest National Laboratory
Richland, Washington 99352

Executive Summary

This report is planned as the first of several that will examine the technology of High Voltage dc systems. It is intended to explore the impacts (particularly the problems to be solved as well as the advantages) of application of the technology of HVdc. Our target audience includes the regulators and planners of the power industry, those whose decisions depend on understanding the implications of such new technology, and who can influence the development and implementation. We have in mind the US DOE, sponsor[1] of the effort; the various engineers at the other government and non-government agencies, such as FERC and NERC; and the reliability coordinators. Utility planners are also likely to be interested, as the many advantages of a dc network await exploitation.

When we began writing this report, we knew that multi-terminal dc systems had been considered by planners and researchers for decades, but had never been built. We wrote the report from that viewpoint, explaining how a network might come into being, and examining and discovering the hypothetical advantages of a networked dc system. We highlighted technical areas that required further work, and we expected to investigate these further in the coming year. Then, in early January 2014 as this report was being finalized, we discovered that on December 25, 2013, a multiterminal dc grid had begun operation in China. It is reasonable to infer that others are beginning to see the advantages of networked dc. (We give a brief description of the Chinese HVdc systems in an Appendix.)

Several factors have contributed to the delay in implementing what we consider advantageous: for example, the difficulty and expense of making a circuit breaker for dc, and the apparent need for some sort of central control. However, the advantages of networking apply to dc just as much as they do to ac, and it is evident that the full potential of dc as part of the power delivery system will be found only once the system is networked.

Even though it lacks the advantages of networks, dc that is only point-to-point nevertheless has its applications. DC applications most often involve moving large blocks of power over large distances, going larger distances under water than is easily achieved with ac, and connecting systems that are not synchronous. These relatively few applications nevertheless account for many GW of transmission capacity being installed based on direct current.

There have been many hints of greater capability over the years, and multi-terminal operation has been considered from time to time. Recognition of the benefits of multi-terminal operation can be traced back to the 1960s, and began with investigations of the possibility of "tapping" the dc line, either with a series tap or a parallel connection. It is likely that the idea of tapping came about because the era was one of significant growth in load and transmission capability, and ac lines that had been built relatively few years earlier were being tapped into to accommodate the growth.

[1] The interest of DOE in the subject of HVdc predates this work. Several years ago, DOE held a workshop in which many of the world's experts in HVdc were present. In April 2013, DOE sponsored another workshop, and again invited experts from around the world. Narain Hingorani, a name known to all in the field because over fifty years ago he wrote the first book in English on HVdc, was the keynote speaker at the latest workshop. The presentations may be found at http://energy.gov/oe/downloads/hvdc-workshop-april-22-2013 (accessed 5 March 2014)

Even before the recent Chinese announcement it seemed inevitable that dc networks would be built. The relatively new technology of voltage-sourced converters made it more likely than ever, and doubtless the matter of a circuit breaker for dc is a solvable problem. The matter of dc networks has received considerable attention in Europe in the last year. CIGRE has now got two working groups engaged on the topic. In the US, EPRI's dc program (program 162) includes multi-terminal grids. Worldwide, university research is under way.

From a US perspective, the question of interest is to guide the development of dc network systems so as to get the most benefit. In particular, what guidance should be given to the control systems that manage the converters? Feedback loops that are built into the design make the converter into something that a power system operator and a power system planner can deal with, but what should it be capable of?

The question is posed by the recent advent of what are called voltage sourced converters, devices in which it is necessary to control, in real time, in each converter, two separate parameters. With the "old" converters in a point-to-point configuration, one could control only a total of two parameters. Typically, the two chosen were the power being transmitted and the voltage on the dc line. With VSC converters, the number of controlled parameters is two at each converter. The parameters are functionally equivalent to the turn-on angle of the rectifiers and the turn-off angle. These parameters affect the voltage and current, and the phase-relation between them, and are usually embedded in control loops that manage, for example, the power being transmitted.

This question of two more controlled parameters can be framed as follows: what is the proper basis for control actions when there is a network of dc lines operating as part of a network of ac lines? There will be freedom to choose: on what basis should that choice be made? Introducing that question and examining responses to it are mainly what this first PNNL report on HVdc is about.

From a national point of view, these same questions can be asked as part of a strategy that considers the trends that emerge in a market-based power system. HVdc networks will be scalable: at the one extreme, they are something that makes sense to apply at the level of a neighborhood microgrid. At the other extreme, they bring advantages to the operation of an entire interconnection, or perhaps even a nation.

DC seems poised (again) to offer the business of power delivery an interesting future.

Acknowledgements

The authors of this report on HVdc networks acknowledge the financial support of Phil Overholt at the US Department of Energy. We note that his continued sense of the value of the effort as it developed was of importance in maintaining momentum. Until the very last days of the effort of writing this report, there were exactly zero networks of the kind we were writing about!

The authors would also like to acknowledge the helpful reviews of the report by Jeff Johnson of the Bonneville Power Administration and Wayne Litzenberger of Power Engineers. Their suggestions, made in the spirit of improving the document, have led to useful changes.

Table of Contents

Executive Summary ..... **iv**

Glossary of Technical Terms Used **1**

1.0 Defining the Question **3**

1.1 Introduction to HVdc and Networks 4
1.1.1 Review of Interconnected "Grids" 5
1.1.2 Review of DC Operation 7

1.2 Advantages of VSC systems 8

1.3 Multi-terminal direct current systems 9
1.3.1 Economics of multi-terminal systems 12
1.3.2 Operation of networked dc systems 14

1.4 Wrap-up: The feasibility of dc networks 20

2.0 Applications **21**

2.1 Supply to urban load centers 21

2.2 Interconnection of offshore generation 22

2.3 Overlay grid 25
2.4 Restoration after a blackout 27

2.5 Power distribution 28

3.0 Aspects of the system problem **31**

3.1 Control of HVdc Networks 31
3.1.1 Scheduling Control 31
3.1.2 Automatic Control 33

3.2 Modeling Needs 35
3.2.1 Modeling Gaps: Steady State 37
3.2.2 Modeling Gaps: Dynamic 38
3.2.3 Interaction between ac and dc sides 40

3.3 Communications 40

3.4 Protection 41
3.4.1. Special Protection Schemes 42
3.4.2 The need for a Breaker on the dc side 43

3.5 High Voltage Insulation 44
3.5.1 Point Intensification 44
3.5.2 Triple Points 45
3.5.3 Corona Rings 46
3.5.4 AC and DC Bushings 49
3.5.5 AC and DC Line Design 52

4.0 Summary and Conclusions **54**

Appendix A. History of HVdc Technology 55

A.1 HVdc Converter/System Overview 55
A.2 Technology of direct current systems 58
A.2.1 Current-source converters 58
A.2.1.1 Mercury arc converters 58
A.2.1.2 Solid-state converters 61
A.2.2 Voltage-sourced converters 62
A.2.2.1 PWM converters 62
A.2.2.2 MMC converters 63
A.3 HVdc ratings 64

Appendix B. HVdc in China 66

B.1 Overview 66
B.2 Multiterminal Systems 67

Appendix C. Protection 70

C.1 Distance Protection, Zone 3 73
C.2 Protection: Concluding Remarks 74

Bibliography 75

List of Figures

Figure 1 Simplified version of the WECC transmission system 6
Figure 2 Series loop dc interconnection 10
Figure 3 DC lines compared to dc network 11
Figure 4 DC line added to form network 13
Figure 5 Power flows on dc network 13
Figure 6 Four-bus five-line dc network 14
Figure 7 Multi-bus system with eveners 15
Figure 8 Possible evener implementation 16
Figure 9 Feedback arrangement to cancel field caused by direct current 17
Figure 10 Use of evener 18
Figure 11 Manhattan Island enclosed by a dc ring 21
Figure 12 CIGRE dc test system 22
Figure 13 Kriegers Flak hybrid scheme 24
Figure 14 Proposed North Sea dc grid 25
Figure 15 Adding dc circuits to close a large triangle around WECC 26
Figure 16 WECC system with additional dc lines 27
Figure 17 Black start capability demonstration 28
Figure 18 Loss of large generator on the WECC system 38
Figure 19 Simulated loss of generator in WECC 39
Figure 20 Dynamic response of power transmitted through the Pacific dc Intertie 39
Figure 21 Hypothetical protection zones for ac side of converter 42
Figure 22 Field intensification due to a protrusion 45
Figure 23 Triple points in insulation system (cross-section) 45
Figure 24. Effect of triple point intensification on a corona ring 46
Figure 25. Surge arrester with added corona rings 47
Figure 26 Cascaded high voltage test transformer 48
Figure 27 Conductor passing through wall, showing electric field 49
Figure 28 Bushing test setup in Ludvika 50
Figure 29 Field distribution outside bushing insulator 51
Figure 30 Full-wave three-phase bridge 56
Figure 31 Customary arrangement of two converters to form a valve group 56
Figure 32 Converter control characteristic 57
Figure 33 Full-wave three-phase bridge 58
Figure 34 Thyratron tubes (valves), as used in industrial control 59
Figure 35 Nelson River Valve Hall 59

Figure 36 Valve voltage, rectifier 60
Figure 37 Valve voltage, Inverter 60
Figure 38 Thyristor valve module 61
Figure 39 Pulse Width Modulation to approximate a sine-wave 62
Figure 40 Modular Multilevel approximation of sine wave 63
Figure 41 Thyristor voltage and current ratings, 1970 to2010 64
Figure 42 Converter valves in Three Gorges Changzhou station 65
Figure 43 Geography of Nan'ao island dc network 68
Figure 44 Zhoushan five-terminal system 69
Figure 45 Primary relay in European 10-kV system, ca 1965 71
Figure 46 Old and new relays in the same rack 72
Figure 47 Three zones of protection for one set of PTs and CTs 74

Glossary of Technical Terms Used

The field of electrical engineering advances by communicating the results of its research. To be effective, the communication requires the use of language specific to the topic: the jargon of the technology.

The glossary below has been provided by the authors with the intent of being a handy reference for the reader who is not familiar with the language of high voltage direct current engineering. It is not a complete dictionary, but has been written to include only the jargon words that will be encountered in this report.

The glossary has been presented in a "logical" sequence rather than alphabetical. The entries are explained or commented on as seems appropriate to the authors.

Converter	A configuration of switching elements (and usually transformers) arranged to convert power from ac to dc, and *vice versa*. If the power flow is from the ac side to the dc side, the system is called a *rectifier*. Power flows from the dc side to the ac side in an *inverter*. There are several technologies possible in making a converter.
Current-source converter (CSC)	A form of ac/dc converter in which the current does not change rapidly when the switching elements operate. Early converters using thryratrons and thyristors had this property: the current "commutated" from one element to the next. To the external dc circuit, the converter appears to have constant current, at least in the short term. Such a converter has one controllable parameter: the phase at which the switching element is closed. It opens a little over a third of a cycle later.
Voltage-source converter (VSC)	A form of ac/dc converter in which a switching element is capable of switching off the current through it. In one implementation, the switching is the same as pulse-width modulation (PWM). Functionally, such a converter has two controllable parameters: Compared to the CSC, not only can the phase at which the switching element is closed be set, but also the phase at which it is opened. That makes the converter much more flexible in operation than the CSC.
Modular Multilevel Converter (MMC)	A recent version of the VSC in which the waveform of the alternating voltage is approximated by a series of steps created by the action of multiple voltage levels of switching elements. Converters of this type have higher efficiency and lower harmonic production than the PWM type.
EHV Extra High Voltage	The term used for ac power lines operating in the range of 345 to 765 kV phase to phase. Such lines have been in operation since the 1960s.
UHV Ultra High Voltage	The term used for ac power lines operating above EHV levels. No ac lines of this class are operational, though test facilities have been constructed in several countries. DC lines at 1 MV pole-pole are in operation, and may be considered UHV.
Bipole, monopole	If the voltage from a converter station is split so that the two lines are equally positive and negative with respect to ground, the system is operating a s a bipole. If one side experiences a fault and is shut down, monopole operation may continue. Sometimes the ground can be used as a return conductor in a monopole, sometimes the opposite pole conductor is switched to operate at (nominally) ground voltage. Ground current is regarded as something to be limited in time and magnitude.

order	The reference value set by the control system of a converter. It may be a power order or a current order, for example.
block and de-block	When a converter is energized on the ac side but operated with all the switching elements open it is said to be blocked. (While this means there is no power transfer, it is not the same as operating with a zero power order.) As blocking means turning off the converter, de-blocking means turning it on.
firing angle	The angle (of the applied ac voltage) at which a given switching element is de-blocked, measured from the time when the voltage first becomes positive. See Figure 37 (p 59).
extinction angle	The angle (of the applied ac voltage) at which a given switching element in an inverter ceases conduction, measured up to the time when the voltage again becomes positive. See Figure 37 (p 59). To minimize reactive power consumption, this angle is minimized, subject to a margin of “spare” to allow for changes in the voltage on the ac side during operation.
insulation system	An arrangement of insulation that separates conductors at different potentials, thereby preventing current flow. Such systems may involve glass or ceramic materials, or organics such as paper, oil and various plastics, as well as air or vacuum.
flashover	The end of a process by which an insulation system fails and an electric current flows. According to IEEE Std 4, the term should be reserved for the failure of solid insulation, but it is in general use in the US applied to air breakdown as well.
sparkover	The term that IEEE Std 4 reserves for the breakdown of gas insulation. The term is used by European researchers in preference to flashover.
withstand	The capability of an insulation system to function as an insulator when a high voltage is applied.
overvoltage, transient overvoltage	A short-term condition in which the voltage on a line exceeds its usual value. The overvoltage may be due to a lightning strike (which can deposit charge directly onto a conductor) or to switching (which can increase the voltage by means of charge trapped on a line). Lightning is fast compared to switching surges. On EHV and UHV lines, switching surges are larger in amplitude.

An Introduction to High Voltage dc Networks

1.0 Defining the Question

HVdc has been part of our mostly-ac power delivery system for decades. The technology saw major advances recently when voltage-sourced converters (VSC) became practical at very high power levels. As this report is written, the converter technology that was once called "HVdc-light" by one of the large manufacturers has reached a power level of about 1000 MW. It can no longer be called "light." The possibility of being able to operate such a large converter in any quadrant of a power/reactive plane makes it very interesting.

These VSC converters are new enough that there is much still to learn about their properties as part of the power system. Computer models are still being refined for planning purposes, and for load-flow and stability studies, where capabilities must be added to the existing positive-sequence programs that meet these needs. But the converters are making inroads into the power delivery system.

Questions must be addressed about their impact on markets and regulations, and about their need for permitting. But there is a fundamental technical question that must be answered.

The question is posed by the necessity to control, in real time, in each converter, two separate parameters. With the "old" current-source converters in a point-to-point configuration, one could control only a total of two[1] parameters. Typically, the two chosen were the power being transmitted and the voltage on the dc line[2]. With VSC converters, the number of controlled parameters is two at each converter. The parameters are functionally equivalent to the turn-on angle of the rectifiers and the turn-off angle. These parameters affect the voltage and current, and the phase-relation between them, and are usually embedded in control loops that manage, for example, the power being transmitted.

The question of two more controlled parameters can be framed as follows: what is the proper basis for control actions when there is a network of dc lines operating as part of a network of ac lines? There will be freedom to choose: on what basis should that choice be made? Introducing that question and examining responses to it are what this first PNNL report on HVdc is about.

That is a relatively new problem. In ac systems, power flows along lines according to the characteristics of the lines, along with the amount of load, and the settings of the generators. A change in the load on the network is reflected in the way power changes its flows throughout the system, but the first changes are the result of the underlying physics, not a control system. To be sure, if the change in load is large enough, the generator governors will react, and gradually make adjustments that will, in turn, affect the flows in the network. But their response is slow, and based on a local measurement of frequency, rather than a system-wide power flow control. The "physics" response is much faster.

---

[1] More, if tap-change transformers were used, as the taps could be used to adjust the relationship between voltage and power. However, tap changers move relatively slowly compared to converter control systems, so they offer a different kind of control.

[2] Strictly, the extinction angle at the inverter is managed, not the voltage. But thinking of that control as being equivalent to controlling the dc-side voltage is a good approximation and a useful simplification.

That self-adjusting feature is a unique and valuable asset of the ac part of a power system. In contrast, the flows on a dc line *must* be set by control systems. The fixable nature of the flow on a dc line can become an asset, too. Finding ways to answer the basic question – on what basis are the settings on the dc to be adjusted – is to be part of our research. It is anticipated that there will be many advantages if dc systems can form networks similar to the ac networks they will complement. While that has not been achieved, it seems to be a step that will fairly soon be taken.

This report is the first of a planned series that will explore the impacts (particularly the advantages) of application of the technology of HVdc networks. Our target audience includes the regulators and planners of the power industry, those whose decisions depend on understanding the implications of such new technology, and who can influence the development and implementation. We have in mind the US DOE, sponsor of the effort; the various engineers at the other government and non-government agencies, such as FERC and NERC; and the reliability coordinators. Utility planners are also likely to be interested, as the many advantages of a dc network await exploitation.

1.1 Introduction to HVdc and Networks

Multi-terminal dc systems have been considered for decades (see, for example, (Foerst, Heyner, Kanngiesser, & Waldmann, 1969) (Dougherty & Kirkham, 1970)), but never built.[3] Several reasons contribute to the situation: for example, the difficulty and expense of making a circuit breaker for dc, and the apparent need for some sort of central control. However, the advantages of networking apply to dc as much as they do to ac, and it is evident that the full potential of dc as part of the power delivery system will be found only once the system is networked.

If there are going to be dc networks, they will come into existence because planners understand their advantages, and can see how to take advantage of their capabilities. Table I lists the advantages of dc: this list is usually applied to point-to-point lines. Table II lists the advantages of networked operation: this list is usually applied to ac systems. Each table gives examples of installations that utilize the particular advantage.

Table I Advantages of dc connection

Advantage	example
non-synchronous / frequency changer	Eel River, Canada; Itaipu, Brazil; Sakuma, Japan
cable capable	Cross-channel England / France
long distance capability	Pacific Intertie, US; Cahora Bassa, Mozambique to RSA
bulk power capable	Nelson River, Canada: Intermountain Power Project
controllability	most
no change in fault level	Kingsnorth, UK

[3] Never built: with the exception of two somewhat different systems, one between Quebec, Canada and New England, USA, and the other between Sardinia and Corsica, Italy. In both these systems, almost all the power flows end-to-end of the system, though an intermediate tap exists. Until late 2013 there were no other systems that could be considered multiterminal. On 25 December, 2013, a three-terminal parallel dc system was commissioned by the South China Power Grid. A description is in Appendix C.

Table II Advantages of networking

advantage	example
reliability / redundancy	All ac power grids, beginning with the British 132-kV "National Grid" in the 1930s
Share resources, allow markets	ditto
Flexible power flow capability	ditto

Table II, showing the advantages of networking, is small, but the advantages are so important to the delivery of power that networks are applied almost everywhere that reliable power delivery is required. Indeed, use of the word "grid" originally was restricted to networked power lines. Networks are the very essence of reliability of connection. The advantages of combining that reliability with the controllability of dc is a topic that must be explored.

1.1.1 Review of Interconnected "Grids"

The first significant application of networking for power delivery was the creation (ordered by government committee in the mid 1920s) of the "National Grid" in Great Britain. At the time, the price of power in different regions of the country was significantly different, and it was to make lower-cost power more widely available that the 132-kV interconnection was mandated. It meant that a single frequency had to be selected (several frequencies were in use around the country), and the number of phases fixed. By 1933, regional networks were built, with the possibility of interconnections. By 1938, the regional networks were routinely interconnected as a truly National Grid.[4]

One consequence of creating a network was the provision of redundant paths. The fact that generators from anywhere in the system could connect to the grid, and load everywhere could be supplied by the grid proved its worth during WWII when the power stations normally feeding the London area were bombed. The same advantage holds for all networks: consider the high voltage network shown in Figure 1. It is a simplified representation of the WECC (Western Electricity Coordinating Council) grid in the US.

[4] A similar situation was developing in the US. At the time the Boulder Dam was being built, the city of Los Angles was offered the choice of taking some of the power and converting to 60-Hz operation, or remaining a 50-Hz area and not getting low-cost power from Boulder. See http://www.telechron.net/features/boulder.htm for some photographs from 1936 or 1937 showing the work involved in converting the clocks of more than 100,000 customers to 60-Hz operation.

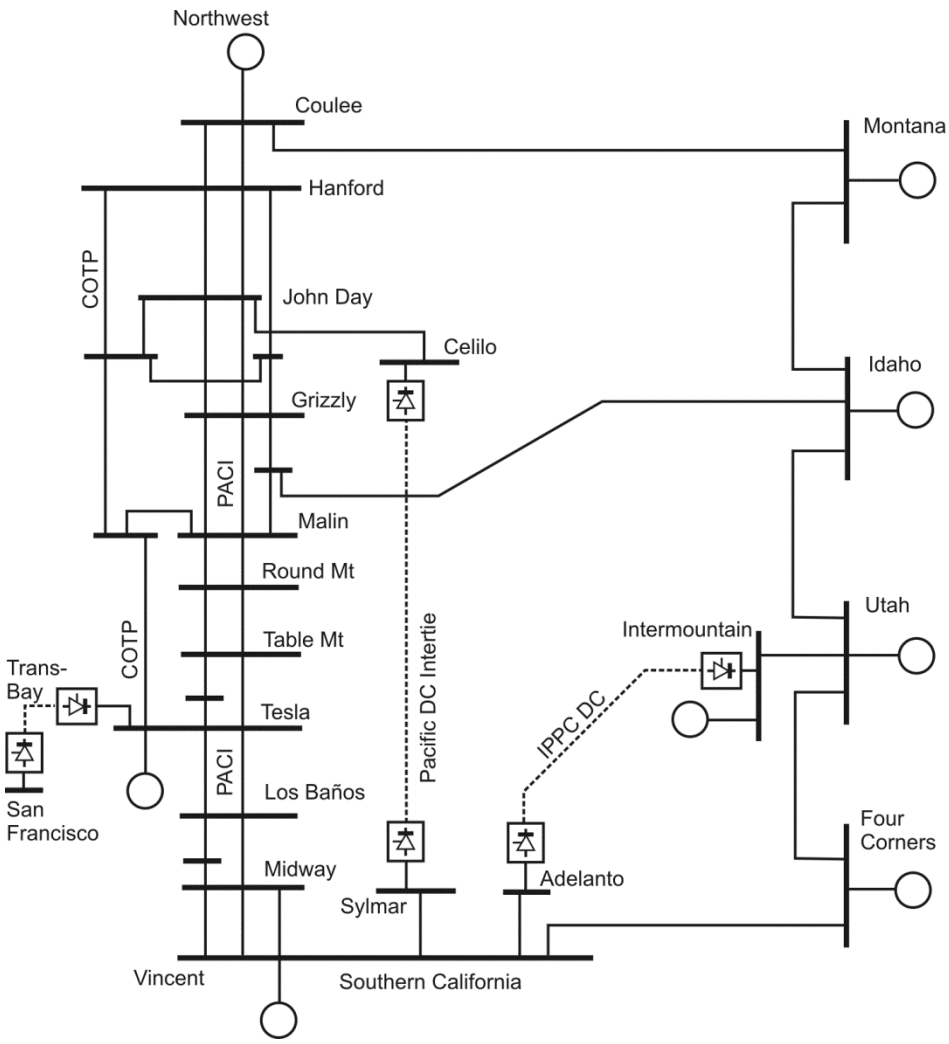

Figure 1 Simplified version of the WECC transmission system

There are two major dc lines in the region, highlighted by being drawn dotted. They do not quite come together in Southern California. Sylmar is north of Los Angeles, Adelanto east and a little north and of there in the Mojave Desert by Victorville. A recent (November 2010) dc cable feeds power across the Bay to San Francisco.

The high level of interconnection of the ac system is very evident, particularly in the N-S direction toward the west side of the network. The two major load centers are perhaps 1800 km apart, in the cities of the Pacific Northwest and the cities of Southern California. Generation is distributed throughout the system: in the northwest it is predominantly hydro, in the south it has been nuclear and gas, with some hydro. Coal generation exists mainly in the eastern[5] side of the system, at Four Corners and at Colstrip in Montana.

An advantage that goes back to the original purpose of interconnection is still applicable today: the ability to take advantage of low-cost power brought in by the network. Since deregulation of the industry, that

[5] The two coal generators at Centralia in western Washington are scheduled to be closed in 2020 and 2025.

has meant that markets can be used to achieve efficient use of resources across quite large areas. That, in turn, takes advantage of the flexible flow capability of the network.

For the most part, point-to-point dc lines do *not* have the advantages applicable to ac networks. They are not redundant, they are relatively inflexible in the way they allow power flow to change. They may be considered a shared resource, however: the Sylmar-Celilo line, for example is "owned" by many power companies.

A dc network would differ from an ac one: not only would it allow flow to take place across the power system in flexible and redundant ways, it would allow these flows to be more controlled than their counterparts in the ac network. Interacting with that ac network, a much higher overall measure of controllability and flexibility would result.

1.1.2 Review of DC Operation

DC power lines do not respond "naturally" by adjusting their flow to conditions on the ac side of the converters. The state of the dc system is completely determined by control systems. In a conventional converter system such as the ones attached to the dc lines in Figure 1, the power may flow from the north to the south or the other way around, completely at the discretion of the power system operators.

For the Celilo-Sylmar line, the flow is seasonal, for example. In the summer, power flow is from the north to the south, taking advantage of hydro generation along the Columbia. Occasionally, especially during the winter, the flow is in the other direction, as river flows are diminished until the spring runoff.

There are two ways to reverse the flow of power on this kind of line. The firing angles of the rectifiers can be adjusted so that the voltage on the line reverses, or the line can be physically reconnected at both ends, maintaining the same potential on the line conductors. For an overhead scheme, reversing polarity is not problematical, but for a cable system, concern over trapped charge in the dielectric of the cable means that switching is usually the preferred option.[6]

The converters are coordinated, but they do not share a common control system. The reason for that lack of sharing is two-fold. First, there has been a general reluctance in utilities to use long-distance communications for protection or control. Second, the time-delay of signals from one end to the other (the transit time for a signal between about Celilo and Sylmar is about 5 ms, minimum), and that imposes a limit that is an appreciable fraction of a power-frequency cycle to the ability to execute control. Therefore, *coordination* (sometimes by voice and telephone) is used, with each terminal acting somewhat independently.

Normally, the rectifier end of the line sets a value for the current, and the inverter end operates in a mode that minimizes the consumption of reactive power. As an alternative, the rectifier can instead be set to

[6] The problem is well-known, but even now not perfectly understood. It was discussed in an early book on HVdc (Harris, 1965) as explanation of why the link from England to France used cable switching to avoid polarity reversal when changing power flow direction. For an explanation of the trapped charge problem, see also (Lampert & Mark, 1970).

operate in a constant-power mode. If conditions in the ac power system make it impossible for the rectifier to maintain this kind of control (a significant ac-side voltage drop could have that effect, for example), the inverter controls are arranged to automatically go to current-control mode while the rectifier does what it can at reduced voltage.

1.2 Advantages of VSC systems

The capability to operate the converters in any of the four quadrants of a P-Q plane exists if the converters are of the voltage-sourced type. Since the purpose of the dc line is the transfer of power, it seems reasonable to operate the converters in a mode that ensures that goal is met. However, coordination is still needed: two converters cannot demand different values for the power transfer, for example. It is expected that a low-speed communication link between terminals will suffice.

An advantage of this kind of converter is that some local (uncoordinated) action is possible. If the rectifier controls the power level on the link, it can also control the local reactive flow (to support the sending-end voltage), independent of the actions at the inverter. The inverter can import the set amount of power, and at the same time control its reactive so as to keep local voltage within acceptable limits. In essence, the link provides a power transfer and two SVCs.

We can in fact list several advantages of VSC converters over the earlier technology:

- The essence of the reason a mechanical switching of connections is required to achieve a voltage reversal (and hence a reversal of power flow direction) is that the rectifier elements are unidirectional: they are controlled diodes, and the current cannot change direction. That is not the case for the switching semiconductors in the VSC. The current can change direction through the device, which should be thought of as a controlled switch, rather than a controlled diode. There is thus no need for mechanical switches at the convertors of cabled systems.

- The old-technology CSC converter would sometimes suffer from an event called a commutation failure. The essence of the reason for the problem is that the current in one diode has to be driven down to zero by the ac network before it can stop conducting. A commutation failure means that the current in a diode did not reduce to zero quickly enough. The commutation failure is a feature associated with the inverter end of the line, because as the current is decreasing the voltage across the diode is not about to go negative. If the extinction angle (see Fig 37, p59 for a waveform) is too small at the inverter (and it is usually controlled to be as small as possible in order to minimize reactive consumption by the inverter) commutation failure is more likely. A small (and maybe transient) change in the ac conditions at the inverter may be all that is required. The result is that three diodes are conducting instead of two, and there is a short circuit on the convertor transformer for some time. While commutation failures are self-clearing, they do represent a large (if temporary) disruption in power flow. In the VSC the current is chopped by the controlled device itself, and the system does not require external conditions to be set properly.

- The CSC always *consumes* reactive power, at a level that is numerically in MVAr about 40 or 50% of the real power in MW, no matter whether the power is being imported or exported. The reactive consumption is compensated by local VAR support and the ac filters needed to clean up the

harmonic distortion. The VSC is capable of operating in any quadrant of a power/reactive-power plane, and therefore is capable of acting like as SVC and providing reactive support to the ac side of the power system.

- Voltage-sourced converters, based on IGBTs, could in principle be constructed in a modular fashion, and the arrangement of converter blocks could be re-configured during operation. The voltage and current ratings could then be changed. Such a mechanism might be developed as a way to reduce losses in a converter system when it was not being used at its full power rating. Bear in mind that in a network, whether ac or dc, not all elements are used at or near to their power rating all the time.

1.3 Multi-terminal direct current systems

Even though it lacks the advantages of networks, point-to-point dc has many applications. DC applications most often involve moving large blocks of power over large distances, going larger distances under water than is easily achieved with ac, and connecting systems that are not synchronous. These relatively few applications nevertheless account for many GW of transmission capacity being installed based on direct current.

Recognition of the benefits of multi-terminal operation can be traced back to the 1960s, and began with investigations of the possibility of "tapping" the dc line, either with a series tap or a parallel connection. It is likely that the idea of tapping came about because the era was one of significant growth in load and transmission capability, and ac lines that had been built relatively few years earlier were being tapped into to accommodate the growth. (Note that a brief history of HVdc is given in Appendix A. It is really a history of two-terminal systems.)

There has seemed always to be some impediment to multiterminal schemes. For example, if multiple current-sourced converters are arranged in parallel, the current margin value would have to be very large – too large to be practical, perhaps – and that would mean departure form operation at minimum reactive power (Ekstrom & Liss, 1972).

HVdc technology was primarily developed in Europe. In the US, the Edison Electric Institute had a research simulator in Philadelphia in the mid-1960s and was considering multiterminal operation by the late 1960s (Dougherty, 1970) (Dougherty & Kirkham, 1970), Research was under way at companies like ASEA, Brown Boveri, English Electric, GE and Siemens. During the 1970s, there were reports in CIGRE of tests on circuit breakers for HVdc.

It is worth considering the reasons that so much research was necessary.

Using the one-line diagram abstraction, a simple configuration of a multi-terminal dc network is shown in Figure 2.

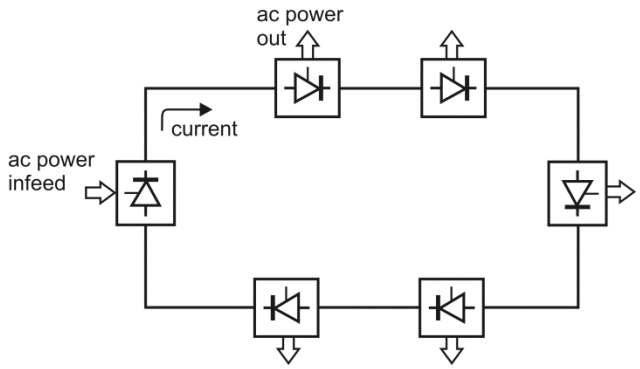

Figure 2 Series loop dc interconnection

With this configuration, the current is everywhere the same, but the voltage around the system changes. For example, if the system is operating with the rectifier as a bipole at ±500 kV, the line could be a single-conductor line. Each inverter could account for 200 kV, and ground could be located in the middle of the converter on the right of the figure.

That arrangement would be workable, but it suffers from a number of drawbacks. Some of the drawbacks are really a matter of familiarity: a faulted converter must be bypassed rather than isolated, for example. Some are a matter of economics: since the current is everywhere the same, even an inverter that taps only a little power off the system must be rated for full current, as must the line in and out. It is generally thought that a line at constant voltage is better from the cost point of view, though surely that depends on the particular situation and generalization is difficult. Another economic factor might be the fact that in a series connection the entire inverter must be constructed isolated, as the voltage on both terminals could be quite high. However, since the usual method of constructing converters is to hang the valves from above (rather than support them from the ground)[7], the cost impact of isolating the inverter valve groups may be small.

From the point of view of control, the series configuration allows operation with the same kind of minimal communication that characterizes two-terminal operation today. The rectifier would set the current, and the inverters would set the voltage. If they were CSC inverters, they would minimize their reactive consumption by operating in constant extinction angle mode, which effectively set the voltage across the terminals. If an inverter failed, it could be bypassed quickly. The voltage on the system would then decrease but the current (set by the rectifier) would be constant. The controls of the non-faulted inverters would likely not even be aware that a fault had occurred, though the protection system would detect the voltage change.[8]

Probably the main reason that series connections such as this have received somewhat less attention in the past than parallel connections is that the control mode generally anticipated is constant current, just as a parallel connection is expected to operate at constant voltage as the load varies. That means that for a series connection, as the load decreases, so does the transmission efficiency, since the losses remain

[7] This hanging kind of construction seems to be the result of a lesson learned when the Sylmar converter was substantially damaged during a magnitude 6.6 earthquake in 1971.

[8] There may be an argument here for adaptive protection to modify settings rapidly.

constant. Furthermore, since voltage control is the only way to control the power distribution, it is not possible to minimize reactive power at all inverters.
The efficiency argument persuaded the designers of the Neptune underwater power system to adopt a parallel architecture for the MV cable system they planned (Howe, Kirkham, & Vorperian, 2002) in spite of the fact that the underwater architecture used by the telecom companies was a series one. In this example, the parallel configuration allowed greater power levels and greater flexibility of power delivery. (For the telecom application, a series connection allowed operation to continue even with a subsea cable fault. The shore stations simply adjusted their voltages so that the current into the fault was reduced to zero.) For Neptune, all converters could be built to handle the same power (in the case of Neptune the level was 10 kW at 10 kV), but the delivery system could not deliver full power to all the converters at the same time. It was found (by modeling) that a stability limit, similar to the nose curve of ac systems, was in operation. With a parallel system, the amount of power that could be delivered was always greater than with a series system.

It is reasonable to ask, since networked operation seems so challenging, why a network is advantageous on the dc side, as compared to a group of separate dc lines. What is the difference between the two systems shown in Figure 3?

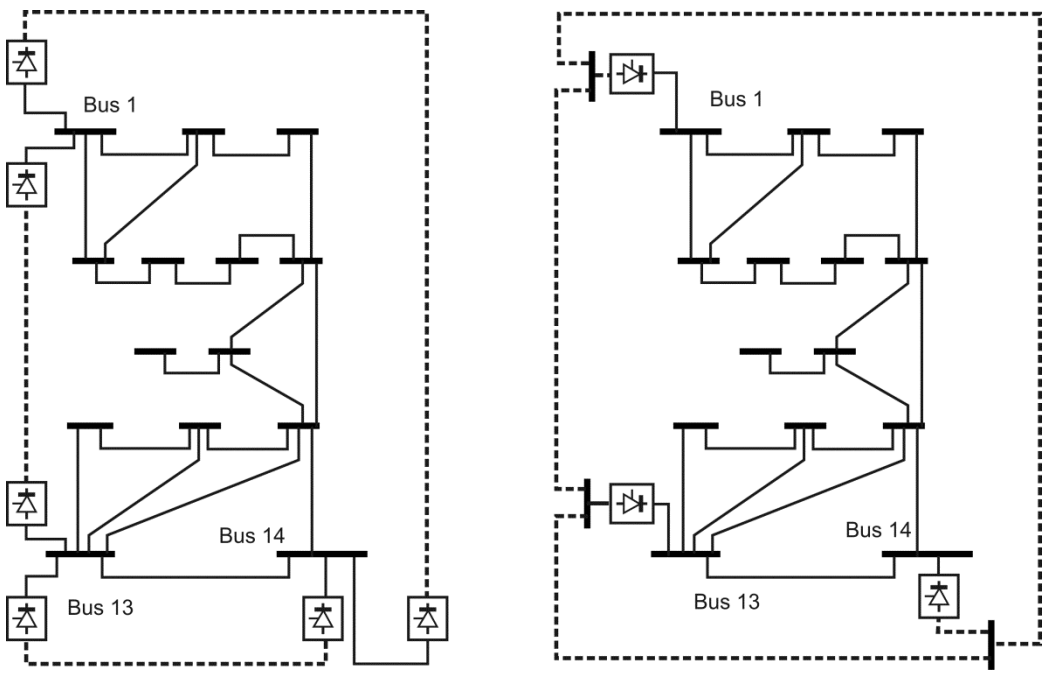

Figure 3 DC lines compared to dc network

The most obvious difference is that the network appears to connect all the same buses (numbers 1, 13 and 14) and yet it uses only three converters. At this point, the interest of the planner would turn to the effective use of capital resources. It is worthwhile to digress and investigate the matter before proceeding.

1.3.1 Economics of multi-terminal systems

Since all existing dc lines are point-to-point, the ratings of the converters at each end of each line are identical. The two ends will have the same voltage and current ratings, which means they must have the same power capability. If a third terminal is added, this equality of rating is not possible.

Suppose there is a rectifier rated at 100 MW, and an inverter rated at 100 MW. A 50 MW inverter is added to the system. The new converter can be supplied at full power by the existing rectifier, but to do that the other inverter has to reduce its transfer to 50 MW. That means it is operating at half capacity.

Suppose we try to solve the problem by adding an additional 50 MW of capability at the rectifier. The converters can all now operate at their rated value: but the flexibility to change power flow has been given up.

It is important to note that this seeming inability to make effective use of capital resources is not a function of the fact that the system is dc. The same would be true of these were ac transformers.

In fact, the problem is that we are expanding the system from two to three. If we were expanding from 22 to 23 instead, we would scarcely notice the fact that we could not operate at full rating everywhere and maintain flexibility of power flow, because we would not expect to have that ability. But because dc starts at two terminals it is natural for us, as engineers, to imagine adding just one.

A consequence of the fact that a lot of dc lines have been built to solve expensive problems (large power flows, long distances, for example) has meant that it has been quite ordinary practice to operate the dc parts of the power delivery system at full rating all the time. That is not normal practice on the ac side of the system, where the daily cycle of load simply has to be accommodated somehow.

In generation economics, there is a parameter called capacity factor (CF) sometimes calculated for generators. It expresses the number of MW-hours generated as a fraction of the number of MW-hours that could have been generated if the machine had been operating at full output all the time. The usual period under consideration is a year. The number varies for different types of generators: for solar, for example, the number cannot be close to 100% because the Sun disappears every night.

It may be possible to use the same thinking to assign a CF to a transmission line, but the reality is that a transmission line has to be sized for the peak load on the line, and the CF is determined largely by the load and is not significantly under the control of the owner. It may be possible to increase the CF of a single line, for example, but only at the expense of decreasing the CF somewhere else.

Given that the CF of the ac part of the system is rather variable, it may not be fair to apply “high CF” thinking to the dc part of the power delivery network. Perhaps there is a tendency to do that because the power flow *can* be controlled on a dc line. CF is a useful guide for generators, and can give a sort of rule of thumb idea about the economics, but the power delivery system economics should be considered as a whole.

If one treats the dc network in the same way as the ac network, the difference between the two sides of Figure 3 might come about because of a system expansion. One might imagine a system in which Bus 1

was connected to Bus 14 by a dc line, and Bus 1 was also connected to Bus 13 by a dc line. At some point later in time, it might be advantageous to connect Bus 13 and Bus 14 by a dc line, and the decision to add no new converters could be made. The system shown in Figure 4 would result.

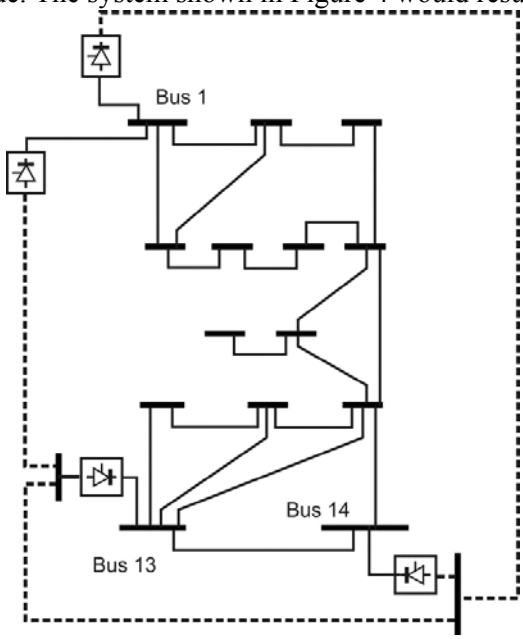

Figure 4 DC line added to form network

In this arrangement, the converters at Bus 13 and Bus 14 feed two dc lines. Flexibility of operation is increased by the controllability of the Bus 13-Bus 14 dc line, but it is no longer possible to operate all the converters at full power in all power-flow modes. Some numbers might illustrate the point. See Figure 5. In this figure, losses are neglected and all converters are assumed to be rated 100 MW.

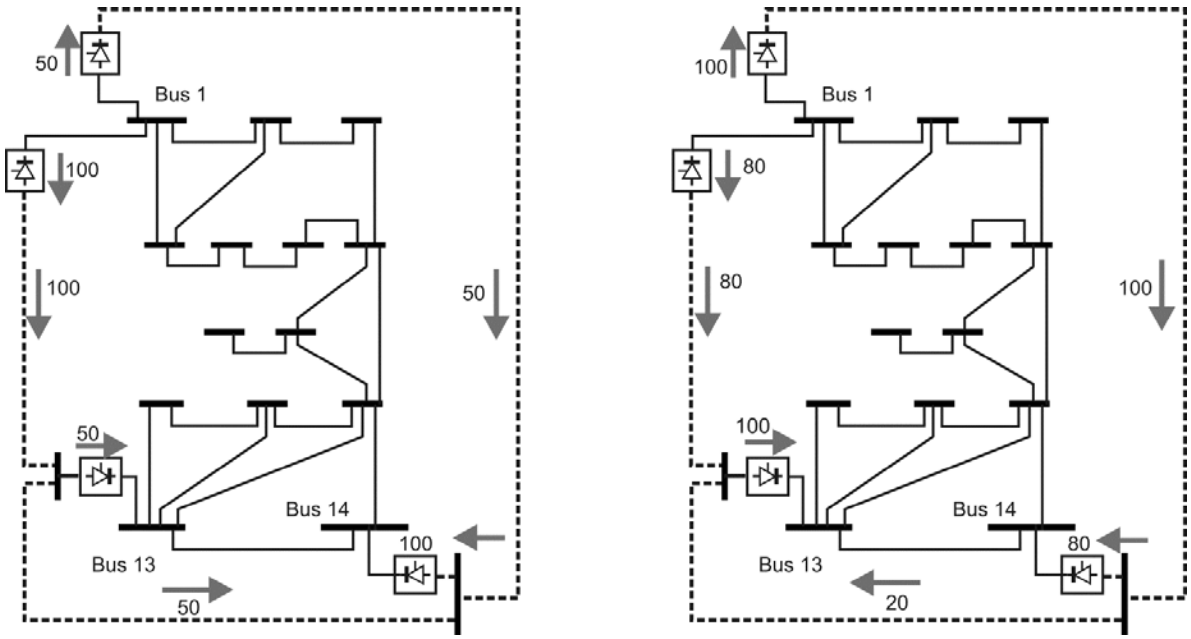

Figure 5 Power flows on dc network

The two sets of flows shown in Figure 5 are broadly similar: Bus 1 is a net exporter and both Bus 13 and Bus 14 are net importers in both cases. On the left side of the figure, the converter at Bus 14 is operating at rated power of 100 MW, and Bus 1 is exporting 150 MW. On the right side of the figure, Bus 14 is importing somewhat less power (80 MW) and Bus 1 has slightly increased its export (to a total of 180 MW). The converter at Bus 13 has doubled its import, however, and the flow on the Bus 13-Bus 14 line has reversed.

Of course, these changes in power flow would take place "naturally" in the ac power system. But remember that the effect of these "natural" changes in flow can be to overload lines, and that sometimes can have serious impact on overall system performance. In the hypothetical situation shown in Figure 5 the flow on the Bus 1-Bus 14 line might have been deliberately increased to reduce loading on an ac line down the right side of the ac network. Such interaction can be deliberately managed. Or it may be that there was a need to support additional load at Bus 13. *The point is that the dc system allows such operational decisions to be made via the dc control system.*

1.3.2 Operation of networked dc systems

Figure 3 shows a similar system with an additional converter (at Bus 3) and an additional line, and no point-to-point connections. The biggest difference between the system with point-to-point lines and the all-networked system of Figure 3 is that the networked version is incapable of properly controlling the flow of power on the dc lines shown.

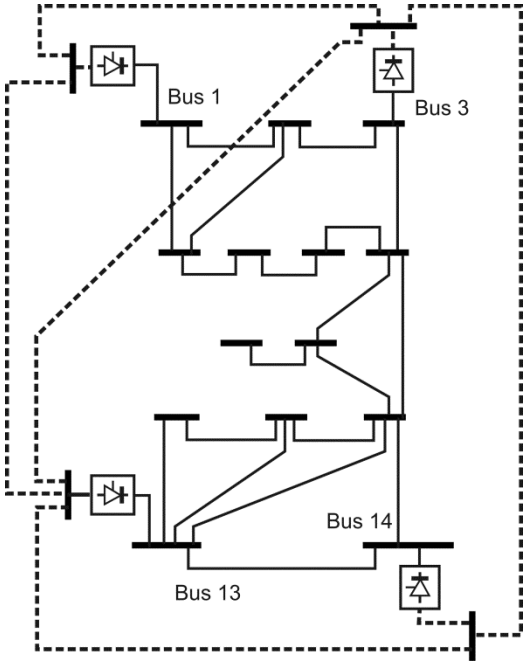

Figure 6 Four-bus five-line dc network

The reason for the problem is that the flow on the lines at each dc bus is governed by the resistance of the line and the voltage difference across the two ends. There are really not enough controllable parameters, given that the three resistances are fixed and only the three voltages can be controlled. A coordination between all three terminals could accomplish flow control, but that would likely be at the expense of some other control capability, and would in any case have the problem caused by the long delay that may exist in communicating from end to end of the system.

The problem was recognized long ago and a control-based current balancer proposed for the control system (see, for example (Foerst, Heyner, Kanngiesser, & Waldmann, 1969)). The addition of a fourth dc bus and a fourth and fifth dc line as in Figure 6 (not an unusual configuration if it were part of an ac system) makes even this solution infeasible. There just are not enough degrees of freedom: there are four voltages that could be controlled, but there are five line flows.

A solution to the problem can be found, however. We offer as a solution a device to be placed in series with some of the dc lines. An example is given in Figure 7, where devices we have named *eveners* are shown with a symbol ΔV. The word evener is ancient: it is applied to a device that used to be used with draft animals that were harnessed abreast, so as to even out the load among them. That purpose is very much the goal of the present application.

The following description of the operation of a system with eveners is not meant to promote the particular design solution shown.The idea is to show that additional flexibility is gained by a mechanism of this kind.

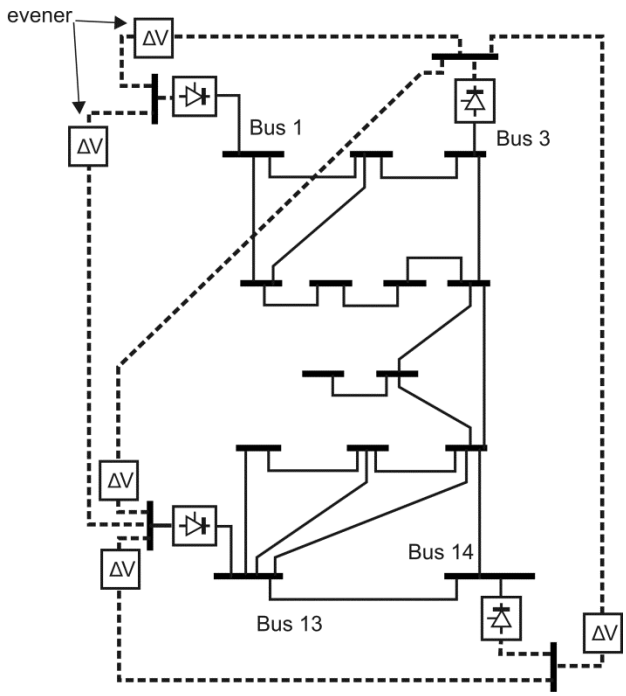

Figure 7 Multi-bus system with eveners

The evener function has to be similar to that of an autotransformer in the world of ac: it need be rated for only part of the power across it. An autotransformer is a version of the transformer in which much of the

winding is common to both primary and secondary. If the voltage ratio is close to unity, almost all the winding is common, and the amount of copper needed is greatly reduced compared to a two-winding transformer. One tends to think of the device as "transforming" only the difference voltage ΔV.

We strive to accomplish the same for the dc evener. The power going through the device (whatever it will be) is much larger than that associated with the contribution of the evener. In fact, while the full current must go through it, the voltage ΔV across it need only be of the order of the volt-drop in the transmission line. For a long line, that may be a few or tens of kV, but it is small compared to the full voltage on the line itself.

It is a fair question to ask how an evener (in this sense) can be made? While we do not claim that an optimal solution has been found, we can identify one practicable method. The purpose is to add (or subtract) a small voltage in series with the dc line, without interrupting the existing current. We propose that an adaptation of the current-source converter be used, as shown in Figure 8. If the application requires that the current be rapidly reversible, the thyristors shown could be replaced by IGBTs.

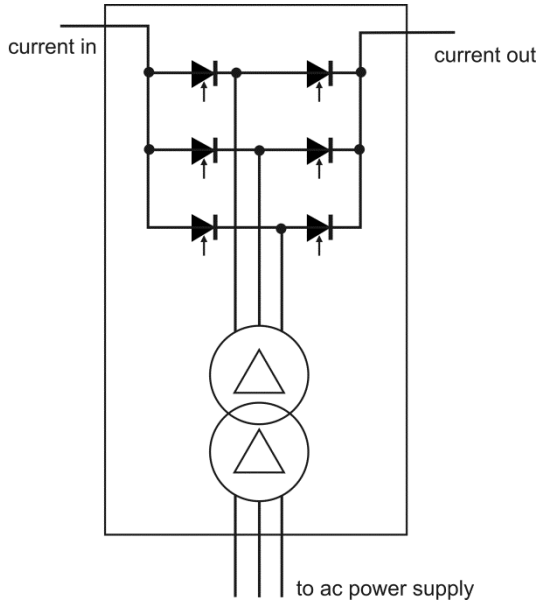

Figure 8 Possible evener implementation

The circuit shown in Figure 8 has the configuration of the normal CSC three-phase bridge as a series element at line potential. The full dc line current passes through the rectifiers and the dc-side winding of the transformer. Thyristors are available that can handle the magnitude of current in a dc line, and can withstand voltages of the magnitude expected here, so the cost of the switching elements is not likely to make the evener an expensive device.[9]

The transformer is an unusual one. It passes the full line current (dc) through the windings. That means the transformer core has to be sized for a potentially large number of ampere-turns. Ordinarily, that large

[9] It might possibly be prudent to include redundant rectifiers, so that a single failure did not take the evener out of service. However, the reliability of the devices is extremely high, and such a precaution may be deemed unnecessary.

current would move the operating point of the transformer toward the saturation points of the B-H curve, and saturation of the core would be a factor in the design. That in itself is not a fatal aspect of the design, but it may be observed that anyway a solution to the saturation issue is possible.

Since the direct current in the device is set externally (it is not even *adjusted* directly by the converter in the evener itself), it is not a crucial part of the operation of the evener. While it creates a magnetic field in the transformer, that field serves no purpose, and it may be possible to cancel it. A series of supplementary winding, probably of a multi-turn low-current nature, could be added to the transformer to cancel the magnetic field of the direct current.

Such cancellation depends on the value of the current, of course, so that would have to be measured and used in a feedback system. However, almost all methods of measuring direct current are, in fact, ways to measure magnetic field (several are reviewed in (Kirkham, 2009)), the problem becomes one of simply filtering the ac component out of the field signal. A possibility is shown in Figure 9.

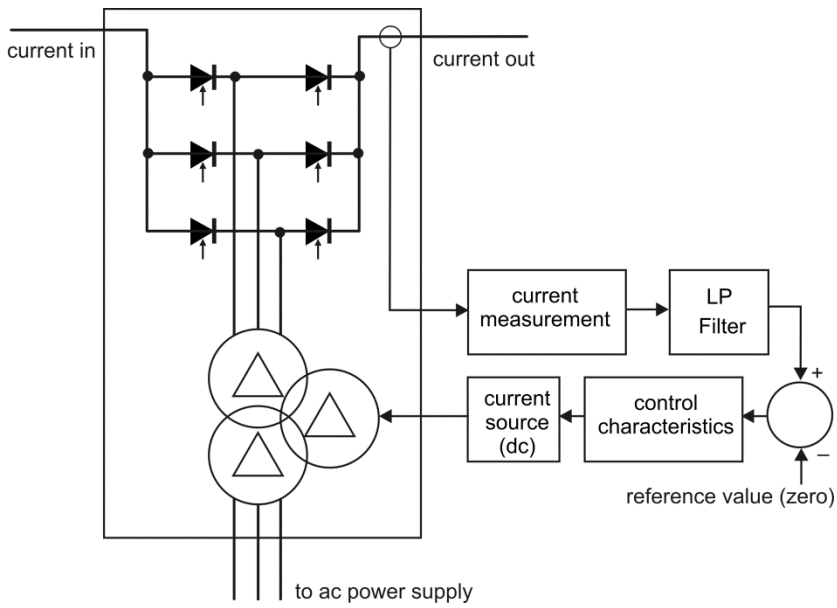

Figure 9 Feedback arrangement to cancel field caused by direct current

It may be observed at this point that we may be considering trading off the cross-section area of the transformer against a considerable increase in system complexity. It may not be justified.

Even in this implementation, the transformer is unusual still in that it requires a large amount of insulation. Even that requirement might be relaxed by using several transformers in series, each with some fraction of the direct voltage across them. A separate grading mechanism for the voltage is necessary, as it is a rule in high voltage engineering that all conductors in a system must have their potential established. Such a scheme is not viewed as problematical in any way, though it does bring up the question of voltage distribution in outdoor dc insulation systems. This topic is covered in Appendix B.

The following example shows the value of the evener. In Figure 10, there are three interconnected dc converters. An evener is added in the line between Terminal C and Terminal A. (It is shown close to terminal C, but the arithmetic is the same for an evener anywhere in that line.) All lines are assumed to have 10 Ω resistance.

Terminal A and Terminal B each inject 100 MW into the network. Each is controlling their local voltage to 200 kV, so there is no flow between them. The total of 200 MW must therefore be the total of losses and power delivered to terminal C. For the moment, assume that the evener is not active.

The current at terminal A (and terminal B) is clearly 500 A. Since (unlike an ac system) the current into one end of a line is the same as the current out of the other, in steady state), the volt-drop on the line B-to-C is 500 ×10 = 5000 volts. The voltage at V_c at C is therefore 195 kV. The power that C inserts into the ac system is thus 195 MW. The difference between this number and the 200 MW inserted is accounted for by losses in the lines, 2.5 MW in each.

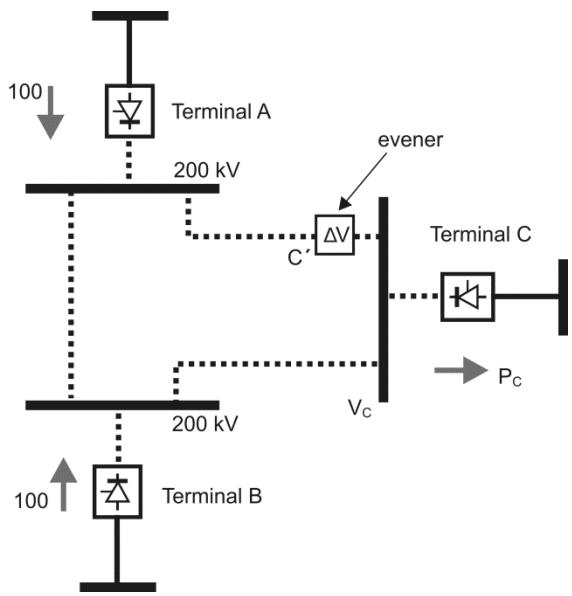

Figure 10 Use of evener

Now suppose that Terminal A requests to decrease the power sent to C, but without sending power to B. That means that the voltage on the dc bus must still be the same (200 kV). The evener makes it possible.

We have required that the power flow from B to C is unaffected, therefore the voltage at C must remain at 195 kV. Now suppose that the evener adds a "buck" voltage of 1 kV. The voltage at C′ is 196 kV, and the current from A is therefore 4,000/10 = 400 A. A is therefore sending only 80 MW, and the losses in the line are reduced to 400 A × 4 kV = 1.6 MW, down from 2.5. The power at the input to the evener, coming from Terminal A, is thus (80 – 1.6) = 78.4 MW. Of this, 0.4 MW flow via the evener to the ac system, and the rest flows through the evener to the converter at C. Terminal C and the evener inject a total power into the ac system of 78.4 + 97.5 = 175.9 MW.

The effect of the evener can be thought of in terms of power gain, though that is not really how it works. In this example, we we have achieved a change of 20 MW (at converter A) for a cost of handling 0.4 MW in the evener, a power gain of 50.

1.4 Wrap-up: The feasibility of dc networks

We have seen that the existence of a dc network can provide controllable ways to support the ac power system. The question is this: is it really feasible to build and to operate such a network?

As far as the power equipment is concerned, no particular problem has been identified. The converters are most likely to be based on VSC technology because of its flexibility in interfacing to the ac system. Eveners, should they be needed, are straightforward modifications of existing CSC technology.[10]

There are some aspects of the future network that we have not yet considered.

- We have not demonstrated that the network can be controlled stably, taking into account the delays that may exist between converter locations. The coordination problem is an extension of that used for point-to-point links, and there is no reason to think it cannot be solved. But it requires further study.

- It may be that a dc breaker is needed, in order to relieve the converters from the overcurrent in the event of a short circuit on the dc side. Some designs of VSC converter can switch off, interrupting the current, but they are of a design (full-H-bridge) that may be costly. The matter may be resolved by considering the system cost of a breaker-based scheme or a converter-based scheme.

- Protection of a dc system is fairly straightforward, in part because the current in the system is a controlled quantity. The protection can therefore be relatively "tight" compared to an ac system that has to allow a wide range of currents, for example. Coordination with the ac system is needed, however, and is not an area that has yet received much attention. IEEE PES has recently (summer 2013) started a working group on the topic. CIGRE is also interested, and has published some work on the topic.

- With a dc network, it should be possible to continue operation into a load pocket formed by the ac system splitting up. Proper control of the dc parameters can keep the frequency exactly on track with the main system if the isolated region has no synchronous generators, and very close if there is some spinning generation.

There is nothing in this list that implies that a dc network is not practicable. To be sure, there is work yet to be done, but the situation has changed considerably since the first dc systems were integrated into ac systems, over the protests and warnings of some prominent power engineers. What was viewed in the

[10] There is no reason to avoid a dc/dc converter in this application, but as far as is known, no suitable converter has yet been designed and built. It would have to be a series-based device capable of developing across itself a controlled voltage.

1960s as risky, is now viewed as routine. DC will work as part of an ac system, and it is to be expected that a dc network will reveal further advantages in the overall integrated power delivery scheme.

In the next section, we will investigate some applications.

2.0 Applications

We have discussed the use of a dc network so far as if it could supplement the way an ac power system operates. In fact, a dc network could go beyond what is currently done in some applications. We will examine some of these next.

2.1 Supply to urban load centers

When dc was first being introduced as a serious contender for power transmission, the possibility of an urban supply network was discussed. When one of us (Kirkham) was in graduate school, the notion of a dc loop replacing the subtransmission-level loops for feeding cities was examined. The idea is thus not new, but until recently the technology to implement it was not available.

A possible dc loop network could be built on a scale the size of a town. Consider the situation for the island of Manhattan in New York. The island is a large load center, and very congested. New overhead right-of-way is very scarce (if it exists at all), so any new service of any size will have to be based on cables.

A networked dc loop is a possible solution to bringing new power to the city. Figure 11 shows how a dc cable could be laid in the waters of the Hudson, the East River and the Harlem River to completely surround Manhattan. Power could be fed into the island in several locations (five are shown) and power could be fed into the ring at many locations from the nearby ac system.

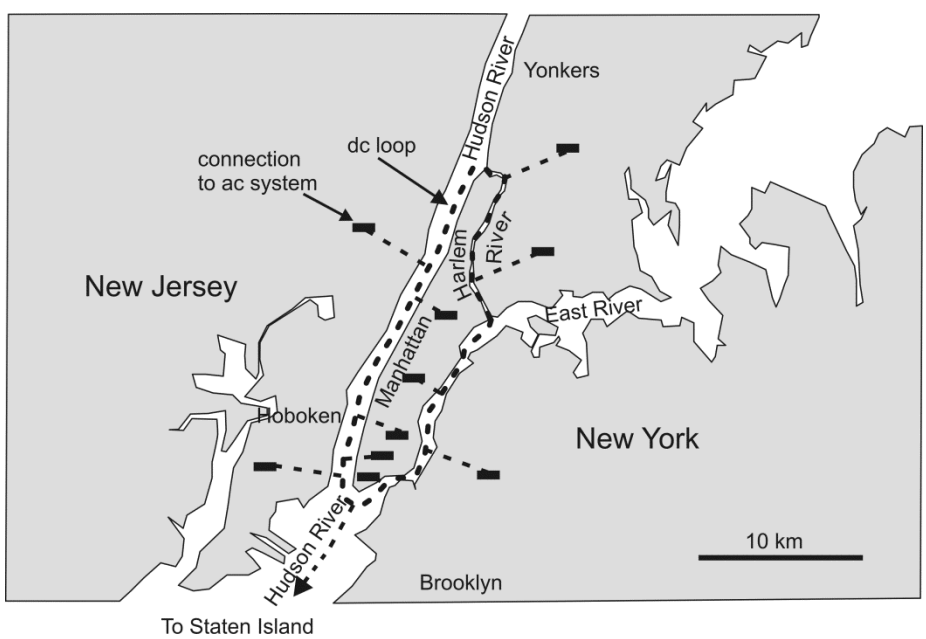

Figure 11 Manhattan Island enclosed by a dc ring

The use of the water to "bury" the cable in this way has several advantages. First, it is possible to put much more cable onto a ship than can be put on a truck. That would mean that the cost and reliability of

the system would not be impacted by the need for frequent splices, as might be the case if all the cable were on land.

Second, while the waters around Manhattan are busy, the cable should be safe from harm. There is not likely to be any trawling activity (a common cause of cable damage in the ocean) and locations where ships anchor could be avoided.

Finally, the water is a reasonable coolant, so the lifetime of the cable should be good based on considerations of thermal degradation of the insulation.

The dc loop shown in Figure 11 should be considered as a dc version of the familiar ring bus. Thus, it should be capable of being sectionalized, so that a fault in any one part does not bring down the whole loop. A future part of our work will examine how that can be done, since the capability has not so far been demonstrated.

It is assumed that a main purpose of the ring will be to improve reliable delivery of power to Manhattan. Most of the loop will be delivering power into the island. Here, advantage can be taken of the fact that a dc system does not increase the fault level on the ac side. Thus, the dc power can be brought into existing ac substations without changing the breakers.

It is a reasonable assumption that there should be a connection to Staten Island's Arthur Kill generating station. However, all the connections can be regarded as capable of operating in either direction. The infeed from Staten Island may one day be useful to supply the island if Arthur Kill is off line, and a black start capability is needed.

2.2 Interconnection of offshore generation

Offshore wind collection may be the first significant application of multi-terminal dc systems. The topic is very practical as offshore wind may be both stronger and more consistent than onshore. The fact that the wind machines are in water means that the use of cables will be unavoidable, and the fact that some generators produce dc makes the use of dc seem like a reasonable match.

In light of this, the recent development in CIGRE (Vrana, Yang, Jovcic, Dennetierre, Jardini, & Saad.H., 2013) of a dc grid test system is interesting because it assumes the use of five ac/dc converters offshore to feed wind power into the hypothetical dc grid. While the CIGRE test system makes no mention of Kriegers Flak, it may have been inspired by that wind system, located as it is in the ocean where the waters of Germany, Denmark and Sweden meet. Figure 12 shows the CIGRE test system, and Figure 13 shows one of several schemes considered for Kreigers Flak.

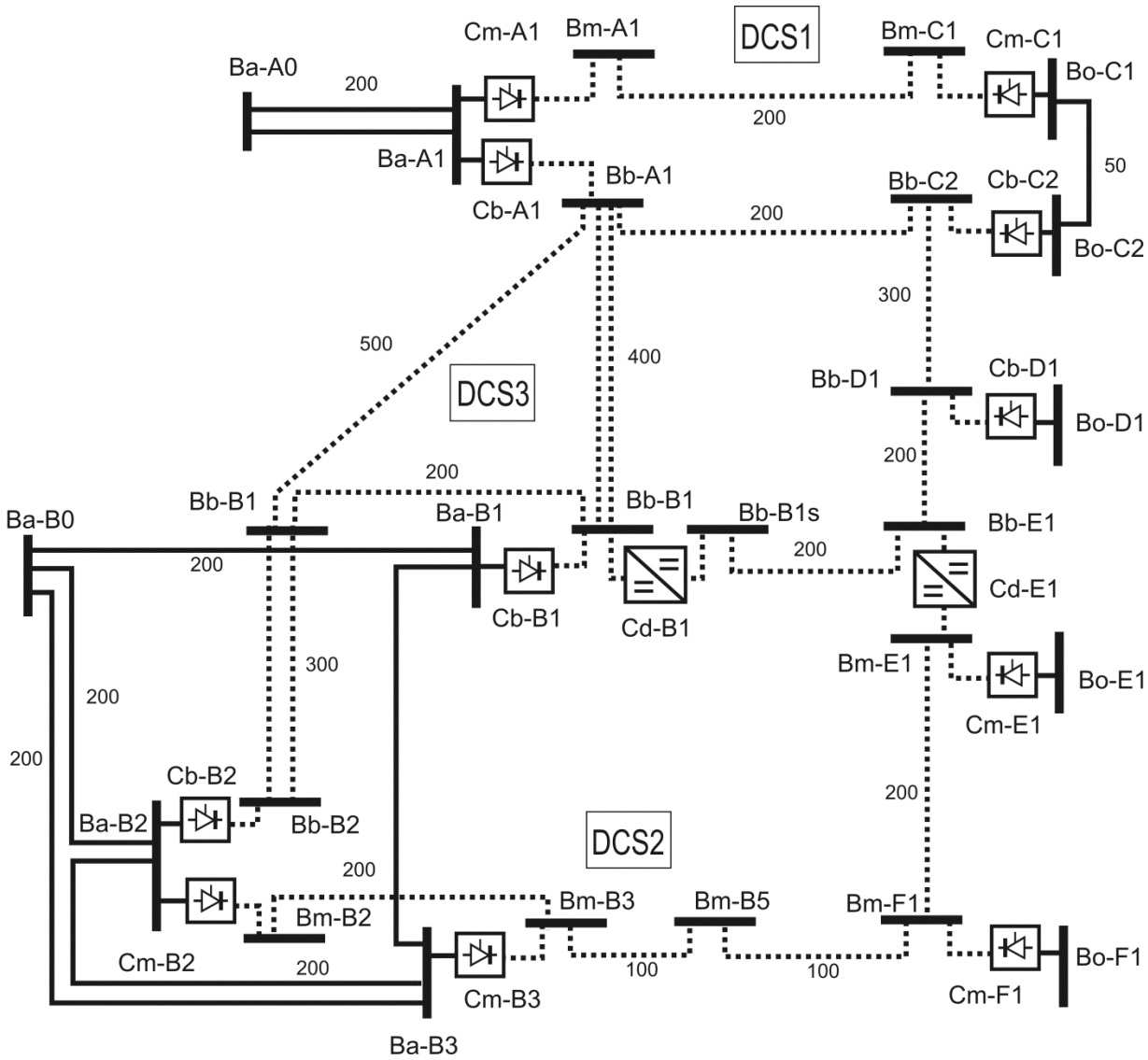

Figure 12 CIGRE dc test system

The numbers next to the lines are their lengths in km. Onshore ac busses are indicated by labels starting with Ba, and offshore ac busses start with Bo. DC busses use the letters Bm if they are monopole and Bb if they are bipole. Monopole converter stations are labeled Cm, bipolar ones as Cb, and dc/dc converters are indicated Cd. Our drawing of the CIGRE system differs from the original because we have continued to use dotted lines to highlight which connections are dc.

It is evident that there are several loops formed by dc-only lines. As the article says in its introduction:

> The academic community as well as transmission grid operators and manufacturers have gained a strong interest in meshed HVDC grids overlaid on AC networks [1], often referred to as Super Grids. No system of this kind has ever been built, and the entire subject is a future vision and still subject to basic research. A HVDC based

electricity grid spanning over entire Europe is envisioned [2], even with possible extensions to northern Africa [3]. [11]

As the article says, dc grids should be feasible, but there are still some issues that require study.

The Kriegers Flak pre-feasibility study[12] identified several interconnection options. One, using a dc bus to gather together the wind power, is shown in Figure 13.

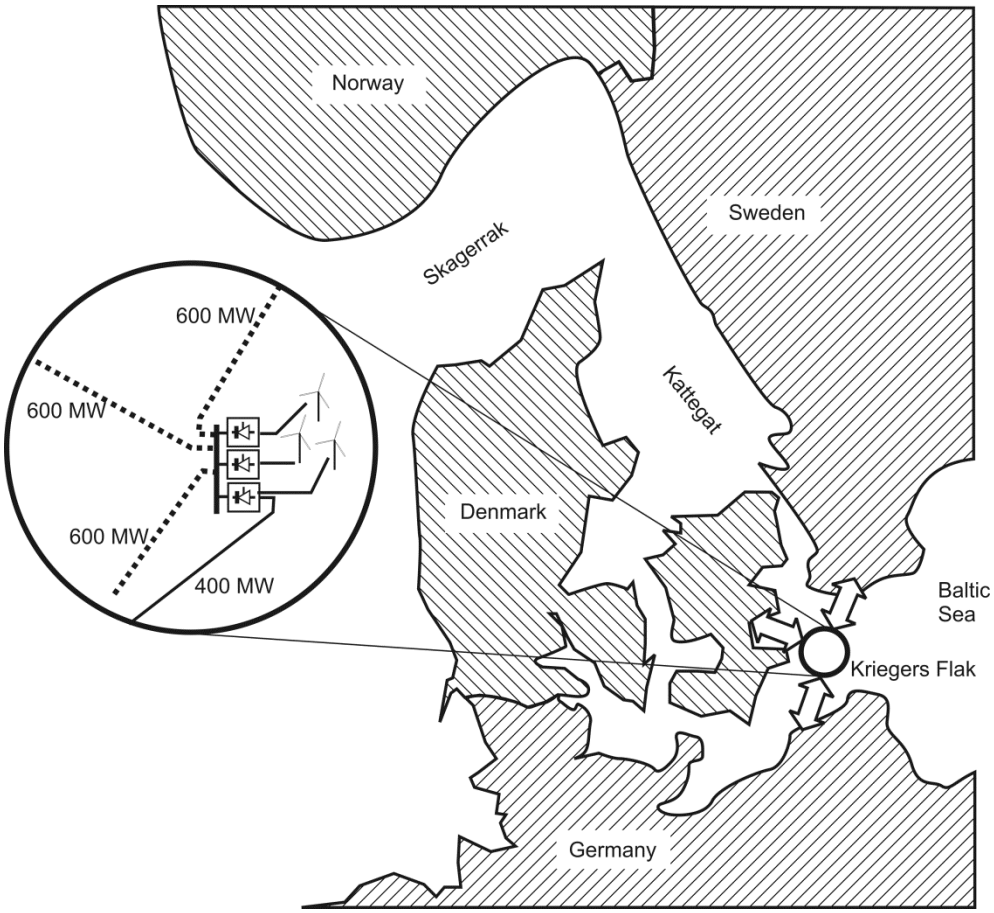

Figure 13 Kriegers Flak hybrid scheme

As in our other diagrams, we show the dc connections dotted. The intention in this scheme is not only to bring to shore the power from the wind at Kriegers Flak, but also to reinforce existing inter-connections between the Nordic countries and the rest of Europe.

[11] The references in the quoted material are
[1] D. Van Hertem, M. Ghandhari, 'Multi-terminal VSC HVDC for the European supergrid: Obstacles', Renewable & Sustainable Energy Reviews, vol. 14, no. 9, 2010.
[2] 'Position paper on the EC Communication for a European Infrastructure Package', Friends of the Supergrid, December 2010.
[3] 'Energy from deserts', Report, Desertec Industrial Initiative, November 2011.
[12] http://www.energinet.dk/SiteCollectionDocuments/Engelske%20dokumenter/Anl%C3%A6g%20og %20projekter/KriegersFlakPrefeasibilityReport.pdf accessed Jan 3, 2014

It is not obvious that the solutions being considered for this application are relevant to expanding into larger networks. Nevertheless, the same pre-feasibility study shows an overlay of dc all over the North Sea, as proposed by the Norwegian TSO *Stattnet*, shown here as Figure 14. Installation of the six lines marked with ∗ is already under way. We will look next at the question of a dc overlay.

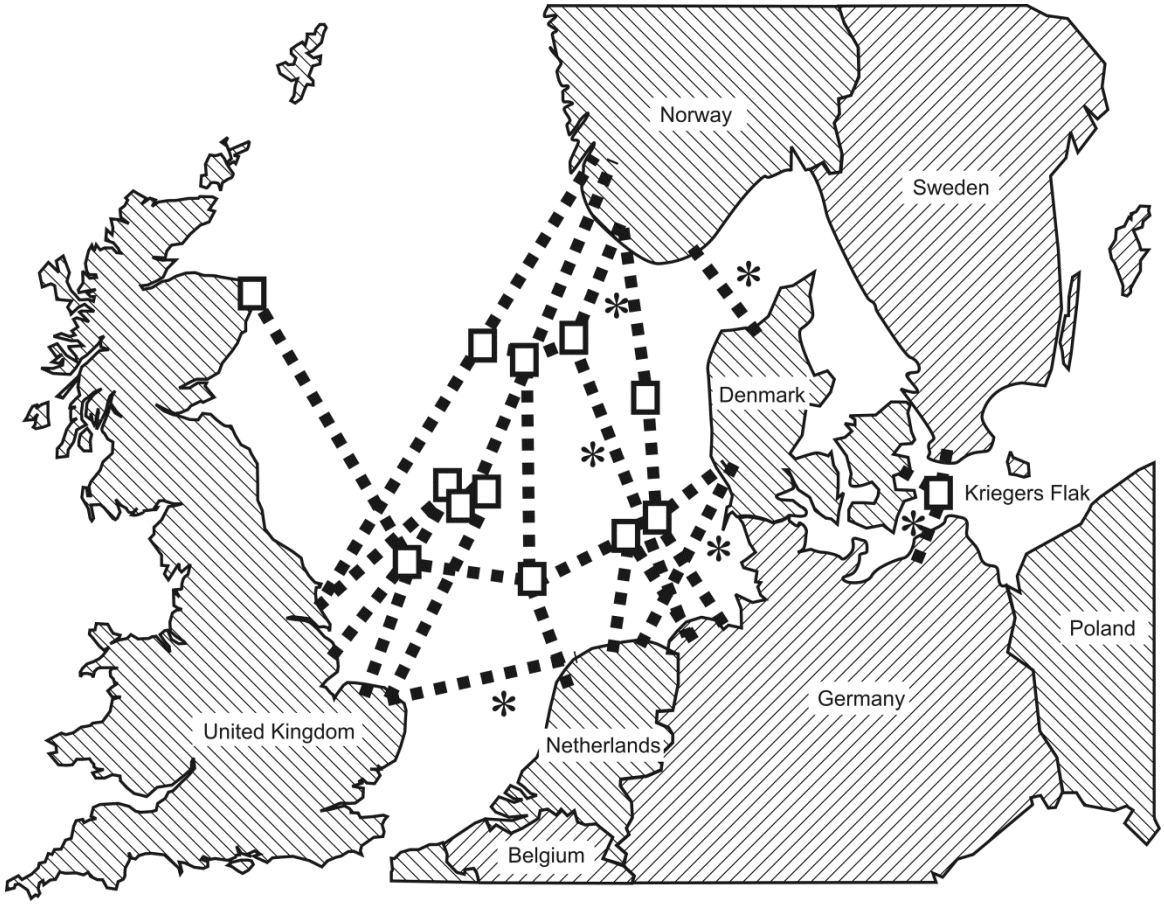

Figure 14 Proposed North Sea dc grid

2.3 Overlay grid

In the Western Interconnection there are two large dc lines already. One is the Pacific Intertie that runs between northern LA and the Washington-Oregon border, on the Columbia. The other is the Intermountain Power Project, operating between Delta, Utah and southern LA. They are shown in Figure 1, but the geography is rather concealed in that figure.

The first of these lines was installed, so the story goes, because of government pressure and in spite of the doubts and objections of many power engineers, who doubted that dc could coexist as part of a large ac system. In fact, not only does dc co-exist, it was for many years used to add damping to the 500-kV ac power system that goes along approximately the same route. It is thus well-established that ac and dc can co-exist.

If a large-scale map is drawn, showing the approximate locations of centers of load and generation, it becomes evident that the addition of two more dc lines about equivalent to the presently installed capacity and length would nicely complete a triangle. Figure 15 shows the possibility: the two solid lines are the only dc lines that exist at present. The broad arrows indicate the power flows that exist.

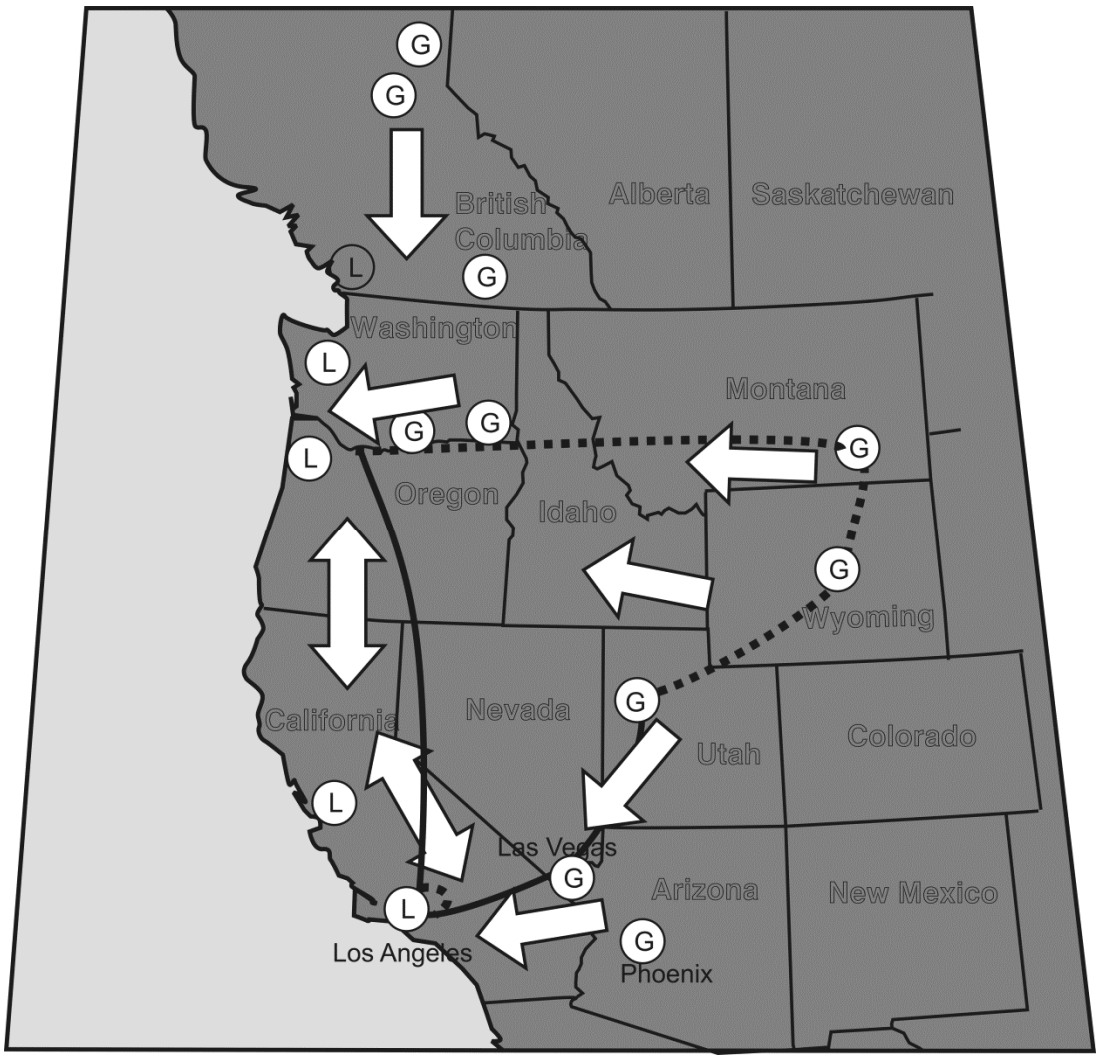

Figure 15 Adding dc circuits to close a large triangle around WECC

It is not suggested that this configuration is exactly appropriate for any particular purpose. However, if the dc lines were built in short segments that eventually comprised not only the sort of configuration indicated but also included many more interconnections (as would be the case for the ac power system), it may be possible to integrate Colstrip into WECC more solidly, and to have an alternate route for at least some of the generation in the Pacific Northwest. Figure 16 shows the effect on the simplified diagram of Figure 1.

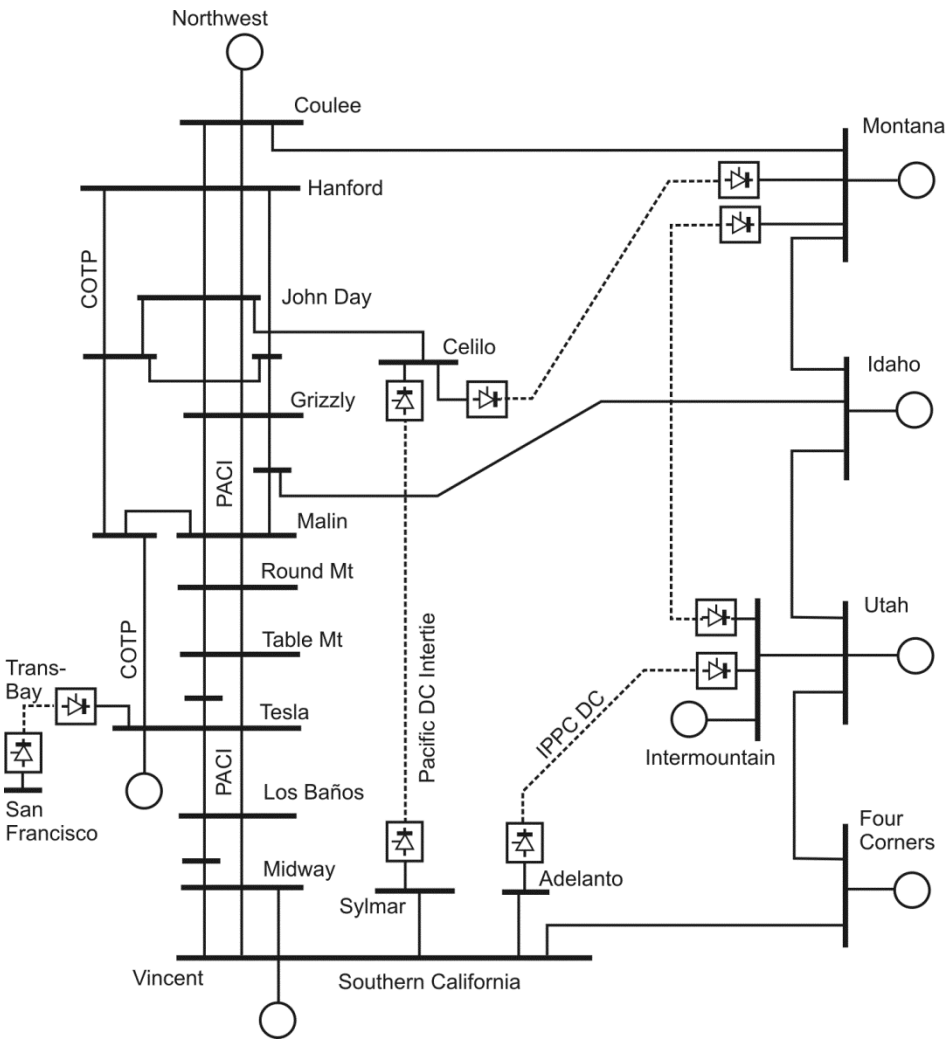

Figure 16 WECC system with additional dc lines

Interestingly, in 2003 Wyoming Governor Dave Freudenthal and Utah Governor Michael Leavitt announced a study known as the Rocky Mountain Area Transmission Study (RMATS). The study was an investigation of the need for new transmission capability in the region, and it took into account a number of possible generation expansions options. One of the schemes considered (Alternative 4) highlighted the need for a 500-kV dc line from NE Wyoming to California. Rather than tie in at IPP in Utah, one option for the line would have it basically run parallel to the IPP line to southern California.

2.4 Restoration after a blackout

What was claimed[13] to be the world's first HVdc transmission using VSCs was commissioned in 1997 between Hellsjön and Grängesberg in Sweden. In the CIGRE paper describing the link, it was understood

[13] One may regard this as just a claim, because the system is part of ABB's test line, and was not a commercial facility. The line is 10 km long, and very limited in power capability.

that there was no need for an ac network to "commutate against." (Asplund, Eriksson, Jiang, Lindberg, Palsson, & Svensson, 1998).

In the early days of HVdc, the pulses for firing the rectifiers were derived from the waveform of the ac voltage at the converter. That is to say, the waveforms were filtered perhaps amplitude-corrected and then compared with a reference (that was itself a function of some of the bridge operating values) to determine the instant at which to fire a particular valve. (The commutation process determined when the valve would stop conducting.) The signal processing was done separately for each of the valves in the converter.

The firing angle was thus quite dependent on changes in the ac waveform. Distortion was a factor, as well as sudden load or generation changes that affected the voltage.

Then, in 1968, a new method of control was described, based on the phase-locked loop (PLL) (Ainsworth, 1968). While there was not a great deal of discussion of the paper at the time of its presentation, it is probably true to say that every HVdc scheme since then has used the phase-lock method. The PLL method allowed for filtering of the error signal in the control loop to determine the frequency characteristics of the controls, and it guaranteed a high degree of firing symmetry between phases regardless of the condition of the ac waveform. But the method did still require an ac waveform to be present in order to start the converter.

That limitation was overcome with the advent of the VSC. The Swedish demonstration reported in 1998 showed that the system could nicely control frequency and power (while either was changing) and could accomplish a start into a system without any generation. The converter has to control the frequency and the voltage. In the demonstration, the voltage was ramped up to nominal over a period of five cycles. Figure 17 shows what the voltage on the ac system looked like (after (Asplund, Eriksson, Jiang, Lindberg, Palsson, & Svensson, 1998))

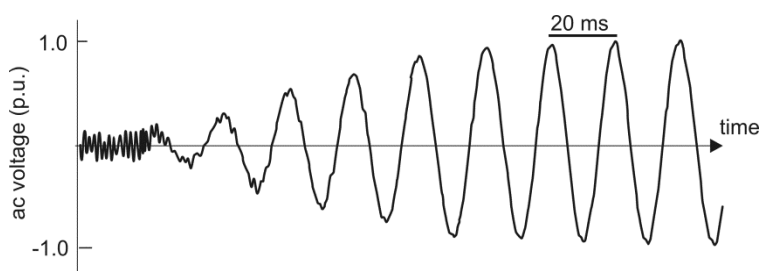

Figure 17 Black start capability demonstration

It is evident that after just a few cycles, the waveform is close to the required frequency and amplitude. By demonstrating this capability, the system also demonstrated that at some future time, the ability could be used to re-synchronize an "island" with no source but the HVdc infeed. That capability must be considered an asset of a dc network based on VSC converters.

2.5 Power distribution

So far in our discussion of dc, we have assumed that the use follows the traditional methods used in ac systems: there is a transmission system, consisting of highly interconnected high-voltage lines, and a distribution system that is not interconnected and operates at lower voltage. In the world of ac systems,

the development of this arrangement was more or less inevitable, as lower voltage distribution systems were how the power system got started, and higher voltage was added later for efficiency and cost reasons, and networks came into existence for reliability.

While one might speculate on how the power system would be designed if it were possible to start from scratch, but with all today's technology available. While that might be an interesting mental exercise, it is fruitless because nobody is going to tear down existing infrastructure. The same cannot be said for the world of dc, because in some ways we are starting with a clean slate, and we do have all the technical knowledge and the necessary elements of hardware and control to do more or less whatever we can imagine.

HVdc networks are scalable. They are something that makes sense to apply at the level of a neighborhood microgrid, a small-scale version of the bulk system. Might we also use them as adjuncts to the existing system? Would we be able to inject power into (or remove power from) the distribution system, and apply some of the dc control and flexibility ideas at that level of the ac power system? Of course it is possible. The only impediments would be those created by the fact that it has not yet been done, and has barely been contemplated.

The design of the ac power system – if design is the appropriate word, perhaps arrangement or structure would be better – is based on the transformer. A transformer at low voltage handles low levels of power. As the voltage is increased, the level of power increases. The transformer ratios do not change very much from one part of the power system to another, and the peak currents involved are somewhat similar. Thus, at the highest levels of transmission there are transformers of 765 kV to 345 kV, a ratio of just over 2:1. There are 500 kV to 230 kV transformers with almost the same ratio. Ratios not very different are used all the way down to distribution. At the very lowest voltage (the level delivered to the customer) the ratio may change considerably. It is not unknown to feed customers at 240 V from lines at around 17 kV, so ratios of more like 70:1 are needed.

Why this relatively narrow range of transformer ratios has evolved is hard to imagine. Perhaps it was simply that an overlay at twice the existing voltage had sufficient economic justification. For a dc system, there is no requirement to apply a similar 2:1 restriction. The economics of the design should rule: does a larger ratio make economic sense? That is, assuming it is feasible without intermediate steps, does it make economic sense to tap off a small amount of power from a large system, or to insert a small amount of power into a large system?

That the answer is yes comes from the interconnection of wind turbines. A very large wind turbine, with blades about 70 m long, might generate a peak power of 5 MW. By the standards of power systems, that amount of power is tiny: one phase of a 765 kV transformer might be rated 100 times that. And yet wind turbine arrays are connected to transmission systems. The economics work because the energy is free, even if the capital cost is large.

It is too early to know whether it would make economic sense to build a network of HVdc that had converters small enough to use at the distribution level. But there is no obvious reason to think that it would not. The controllability of dc may be exactly what the smart grid distribution system needs. Power generated by DER sources could be removed via dc at the level of the distribution substation, and moved into the transmission system, bypassing the ac infrastructure.

It may even be possible to take advantage of the development of moderate-sized converter hardware for wind machines. While in this report we have shown how multiple rectifier elements can be connected in series and parallel to achieve very large power ratings, we have also observed that the ratings of a single element have increased over the years.

One aspect of dc in the distribution system is the possible impact on microgrid operation. It is possible to define the power system in a way that makes tallying load and generation in the distribution system straightforward. With some communications, it is then feasible to achieve approximate balance at times of system stress, and to create microgrids as a response to the stress. The availability to move power controllably at that level, via a dc interconnection, would make possible much better control of the resulting unsynchronized microgrids. That is surely an area worth exploring further.

3.0 Aspects of the system problem

It is the thesis of this report that HVdc network systems offer increased flexibility, because of the possibilities of controlling two parameters at each converter, and increased redundancy, because of the networked topology. To take full advantages of these qualities, the appropriate control strategies must be envisioned and designed. This "from the ground up" strategy is necessary given the degrees of freedom in the system and the lack of experience in operating this type of system. In this section, possible control strategies are examined.

3.1 Control of HVdc Networks

We divide control strategies into two categories: scheduling control and automatic control.

- Scheduling is the word used for actions that take place in control rooms to set up the various dc network parameters (for example, active power injections to the ac network) in coordination with the scheduling processes of the ac network (for example, generation dispatch). System-wide or area-wide knowledge is usually needed for scheduling control.
- Automatic control refers to actions taken automatically by the control systems without human interaction. Automatic control can use local information and/or system wide information through a communication system.

The scheduling part of controlling a dc network is analogous to the scheduling part of the ac network. The aim is to set the parameters so that economy is optimized given the constraints on such things as line flows and reserve margins. The automatic part of dc network operation could conceivably mimic the automatic operations on the ac side of the power system. However, the ac system may not respond in an optimal way to some changes in the system, since fundamental things like the power flow down a particular line cannot be controlled. The dc network can be controlled, and it can be controlled in any way that can be imagined.

3.1.1 Scheduling Control

Scheduling control sets parameters of the dc network from a control center after analyzing system wide information. For example, the power injections from the dc network to the ac network/s can be decided based on congestion management in the ac system. For this example the decision of power injections should be supported by the knowledge of loads (current and expected) and generation cost or price.

Another example of scheduling control is the arming of special protection system (SPS). SPS are actions taken automatically based on system-wide information responding to schemes, such as nomograms, that can be armed in advance as a function of system operating conditions. For example, an SPS could trip generation or load to relieve a line overload; the amount and location of generation or load to trip can be defined in advance based on pre-contingency conditions. This last procedure is known as arming. The dc

network can be very useful in supporting SPS by quickly redirecting flows. The way the dc network will respond in support to an SPS can be defined in the scheduling control.
These two examples of scheduling control complete the following list of possible actions:

- Definition of active power injections from the dc network to the ac networks. The power injections can be defined to alleviate congestion in the ac network, possibly increasing the utilization of generation assets.

  The power injections will also affect overall transmission losses in both ac and dc networks, and these will interact. It is reasonably certain that the minimization of losses must be carried out on both ac and dc at the same time. The problem is one of active research. (Cao, Du, Wang, & Bu, 2013) (Macfie, Hurlock, Taylor, & Irving) (Feng, Bertling-Tjernberg, Tuan, Mannikoff, & Bergman, 2013)
- Definition of reactive power injection from HVdc converters to the ac networks and settings of ac voltage control in HVdc converters. The reactive power of VSC converters is defined independently from the active power, opening new possibilities of ac voltage support and reactive power management in the ac network. This functionality has been applied in similar devices like SVC and STATCOM.

  In the case of using VSC converters of HVdc networks for this function, the reactive capability limits of the converters should be considered in software tools used in control centers for scheduling (Beerten, Cole, & Belmans, 2012) (Adam, Anaya-Lara, & Burt, 2010).
- The power injections to the dc network can also affect congestion in the dc network. The power flows in the dc network are more controllable than ac power flows, because the flow is set by the ac/dc converters and the possible use of eveners. Even though there is more controllability, dc transmission limits must be considered when defining the control strategies. The power flows in the dc network are functions of the converter settings; an algorithm to solve the power flow in a VSC multi-terminal network has been proposed in (Beerten, Cole, & Belmans, 2012).
- Definition of settings for dc voltage control. DC voltage can be controlled by modifying the power injections to the dc network in one or more converters. The strategy and control settings to maintain dc voltages can be defined as a scheduling process and it should coordinate with the various other functions. This dc voltage control functionality can also have an automatic control component; this is described in the next section.
- The settings of automatic control, for example the gains of feedback control loops and control modes can be changed responding to scheduling control. This can help take advantage of the flexibility of dc network and adapt the interaction between ac and dc networks as a function of operating conditions.
- Arming of HVdc network contribution to special protection systems (SPS). The flexibility of dc networks can be exploited in support of SPS reducing the burden in actions like generation and load tripping after certain events. This topic is revisited under the heading Automatic Control, below.

The design of the control strategies listed above presents several challenges. Both planners and system operators need adequate analysis tools to analyze the expected behavior of HVdc networks. These are people with considerable intuitive knowledge of how their system works: that will change with the addition of a dc network.

3.1.2 Automatic Control

Automatic control governs the behavior of the system in response to sensed changes. For example, in a traditional HVdc system there is an automatic control loop to maintain constant current at one end and constant dc voltage at the other end of the line. These parameters are kept constant by the controls in spite of changes to ac-side voltage, for example. On the ac side, an example is the generator's speed governor system. The speed governor system modifies the prime-mover power (e.g. water flow) to maintain the generators speed, supporting the system frequency, and hence maintaining the power balance between load and generation. Given the flexibility and degrees of freedom of HVdc network systems, especially those with VSC converters, new automatic control strategies can be envisioned.

The automatic control can be used in a dc network to maintain or modify active and reactive power injections, ac and dc voltages to meet real-time system needs. The following functionalities are possibilities:

- Voltage support in the dc network. One converter can be used to maintain dc voltage as it is usually done in point-to-point HVdc systems. The dc voltage control can be also "shared" with more converters in a dc network through droop control strategies. One example of modeling and design using this strategy was proposed in (Beerten, Cole, & Belmans, 2014) and (Beerten & Belmans, 2013).

  It is important to understand the inter-relationship between dc voltage control and active power flow. For a dc network, the relationship is not the same as for an ac network. Changes in power schedules in converters have to be provided by the converters controlling the dc voltage. The power flow on a line is given by its resistance and the volt-drop, whereas in an ac power system the flow is governed mainly by the impedance and the angle across it (because the voltage is generally held close to 1 p.u.). Therefore, it is important to design adequate dc voltage control strategies to achieve a good compromise between dc network performance and desired effects in the ac system.
- Voltage support in the ac system. VSC converters can provide ac voltage support independently of the active power injections. The ac voltage support functionality is limited only by the capability curves of the VSC converters (Beerten, Cole, & Belmans, 2012) (Adam, Anaya-Lara, & Burt, 2010). An automatic control can be set up to control ac voltage; that is, the VSC converters in a dc network can provide SVC functionality.
- Oscillations damping in ac network. The VSC converters of a dc network can be utilized to damp oscillations in the ac system. This functionality can be achieved by modulating the both active and reactive power injections to the ac network. The design of such control should take into account the characteristics of the dc network to take advantage of its flexibility. This type of automatic control can be enhanced by wide-area measurements from, for example, PMUs installed at the ac side of the converters.

  It may be recalled that damping control was added to the Pacific Intertie dc line for several years, and worked well in many ways. The drawbacks were that the control signal was not always optimal (the Phasor Mweasurement Unit had not been invented yet) and the response to a change on the ac side was not always optimal.
- Frequency support in the ac system/s. A dc network can be equipped with automatic control that modifies the power injection between ac and dc systems as a function of the ac frequency. When

the dc system interconnects two or more ac systems, the frequency support can be transferred from one system to another. When the dc system is embedded in a single ac system, the frequency response can be redistributed by the dc system, responding to signals like FNET or PMUs. This type of strategy can be done with only local measurements at each converter, and it could be enhanced with communications. There have been some proposals for this type of functionality (Silva, Moreira, Seca, Phulpin, & Peas Lopes, 2012); however there is still work to be done to combine communications and fully utilize the flexibility of HVdc networks.

- The flexibility and fast reaction of HVdc networks can be realized in special protection systems (SPS). SPS automatically execute actions (e.g., generation or load tripping) in response to local and remote measurement and for certain contingencies and operating modes. The automatic contribution (that is, the dynamic response) of HVdc network should be designed to take advantage of the capabilities of the dc network.

  The possibility of a dc control scheme interacting with a special protection scheme is intriguing. The advantage would be that power flow on the ac system might be managed so as to obviate the need for tripping. As we have seen, when a fault occurs on an ac power system, the power flows redistribute themselves after the fault is cleared. Sometimes it is this redistribution that triggers the special protection scheme. Consider the following extract from a NERC report on the blackout of 2011 in Southern California:

  > Milliseconds after the loss of IID's El Centro-Pilot Knob 161 kV line, at 15:37:55.890, NextEra's Buck Boulevard combustion turbine generator tripped due to operation of SCE's Blythe Energy RAS, dropping 128 MW of generation.[14] This was caused by a reduction of counter-flows on the Julian Hinds-Mirage 230 kV line that had been created by heavy flows from the Julian Hinds-Eagle Mountain 230 kV line feeding toward the WALC 161 kV system to support the heavy north to south 161 kV flows toward Pilot Knob. When the El Centro-Pilot Knob 161 kV line tripped, those counter-flows disappeared, initiating the RAS operation. The Buck Boulevard heat recovery unit ramped down by 82 MW over the next few minutes. The Buck Boulevard combined cycle plant was generating 409 MW (535 MW rating) at the time the combustion turbine tripped. Tripping the Buck Boulevard generator did not increase loading on Path 44, because it is not located south of Path 44.

  It was the change in flow on one line that tripped the generation, and continued the process that led to the eventual blackout. With only ac lines in the power system, the degree of controllability is very limited. With a dc network present, the system may be more resilient.

  It would be interesting to see if the RAS could instead have prevented the blackout by re-scheduling flow on a dc line, had one been present. Such a possibility is well-known (Anderson & LeReverend, 1996), but could be more widely applied if there were more dc lines (or a dc network) embedded in the network.

Each converter in the HVdc network could provide at least one of the functionalities listed above. It is a challenge to define how these advantages and functionalities can be combined and coordinated meeting operational constraints of both ac and dc systems.

[14] The Blythe Energy RAS, among other functions, trips generation owned by NextEra to protect the Julian Hinds-Mirage 230 kV line from overloading with east to west flows for a potential loss of the Julian Hinds-Eagle Mountain 230 kV line. Buck Boulevard is connected to SCE's 230 kV system in the Blythe area.

Additionally, with the exception of SPS, many automatic control functionalities can be achieved with only local information. Communications and system-wide information can enhance the performance and can help coordinate among the different functionalities.

The tools that will be needed in order to take proper advantage of dc networks integrated with ac power systems therefore must include the ability to model the static behavior of the combined system (for evaluating scheduling options), the dynamic behavior (to allow evaluation of the automatic control options) and the communication requirements of the combined system.

3.2 Modeling Needs

Most of the simulation software written to model large scale power system interconnections (e.g., GE PSLF, Siemens-PTI PSS/E, and Powerworld) do not have models for HVdc VSC multi-terminal networks. DC networks with CSC converters can be modeled, but with some limitations.

The software EUROSTAG has recently included the capability of modeling HVdc VSC systems in this type of simulation (Cole & Haut, 2012).

The reason for this apparent shortcoming is that HVdc models in these software tools have evolved according to the needs of the systems that have been implemented. For example, software vendors have implemented a model of a HVdc CSC network to represent the Pacific dc Intertie in the WECC. This system has two converters at one end (Celilo, on the Oregon/Washington border) and one at the other (Sylmar, in southern California). Hypothetically, it requires a dc network to interconnect these devices, but in practice the two converters at Celilo are barely separate, electrically.

The current HVdc CSC models cannot be adapted to represent VSC multi-terminal dc networks. For example, one of the limitations at the converter models is that the reactive power on the ac side cannot be controlled. We stress that this is not a defect of the model: such constraints exist because the model deals with CSC technology and control strategy.

Two-terminal VSC HVdc systems are usually included in most software packages, but it is not common to have models for multi-terminal VSC HVdc networks.

Both static power flow and dynamic models of HVdc networks are in need of further development. Static power flow model should be extended to represent VSC steady state operation with all the possibilities of controlling reactive power, ac voltage, dc voltage, and active power injections of inverters interacting with the ac system. At the same time, the combination of control modes should still allow for a dc network solution of Kirchhoff's and Ohm's laws.

Dynamic models should represent both the automatic control systems of the converters and the dynamics of the dc network. The automatic control systems converters are usually manufacturer-specific. Implementing them could introduce challenges to make the models available to the engineering community. There have been proposals for both dynamic and static models of VSC HVdc networks

(Beerten, Cole, & Belmans, 2012), (Cole & Haut, 2012). However VSC HVdc networks are still an evolving technology, and modeling will still be evolving as well.

New VSC multi-terminal models are needed. These models should be flexible enough to provide freedom to designer engineers and still represent feasible configurations. With such models the designer engineer will be able to take full advantage of HVdc networks.

In software packages to model large interconnections (e.g., GE PSLF, Siemens-PTI PSS/E, and Powerworld), HVdc converters are represented by controlled voltage representing their fundamental frequency component. These voltages are controlled by higher level controllers, ignoring valve switching dynamics and its detailed control.

This simplification is mainly needed because the simulation software packages for large interconnections cannot represent dynamics other than those of the fundamental frequency. This is because this has been historically the phenomenon of interest in this type of simulations. Additionally, for CSC HVdc, it has been also shown that this simplification is acceptable when valve switching dynamics are not of interest. Reference (Johnson, De Mello, & Undrill, 1982) compared this simplified model to a more detailed model that considers line and switching dynamics, concluding that the comparison was acceptable.

An intermediate simplification is obtained using the dynamic average-value models (Chiniforoosh, et al., 2010). Dynamic average-value models can capture enough detail to represent point-on-wave dynamics with fundamental and harmonic behavior of converters by averaging the effect of switching over a time interval. Using this theory, models have been developed for CSC and VSC converters (PWM and MMC), see for example references (Peralta, Saad, Dennetiere, Mahseredjian, & Nguefeu, 2012) (Saad, et al., 2013) (Liu, Watson, Zhou, & Yang, 2013a) (Liu, Watson, Zhou, & Yang, 2013b) (Lefebvre, Gole, Reeve, Pilotto, Martins, & Bhattacharya, 1995). These models can be represented in electromagnetic transient software, such as ATP, PSCAD, and Matlab/Simulink. The models discussed before for fundamental frequency representation (used in software like PSLF, EUROSTAG, PSS/E) can be seen as particular cases of average-value models, more examples of these models can be found in (Teeuwsen, 2009) (Lefebvre, Gole, Reeve, Pilotto, Martins, & Bhattacharya, 1995) (Johnson, De Mello, & Undrill, 1982).

With the simplification just described for the fundamental frequency dynamics, the modeling focus of HVdc system has been in the higher level control. For example, the model for the Pacific DC Intertie in WECC consists of high level dc current and dc voltage controllers for the converters at each end of the intertie. The outputs of these controllers are angle and voltage magnitude of a fundamental frequency component at the ac sides and current at the dc sides. Detail about controller models can be seen in (Bunch & Kosterev, 2000), (Weber), (Hammad, Minghetti, Hasler, Eicher, Bunch, & Goldsworthy, 2010).

For multi-terminal VSC HVdc systems, there are not industry tested models available. Reference (Cole, Beerten, & Belmans, 2010) proposes a general dynamic and static model to be used by researchers. This model is very useful and necessary for research and feasibility studies. However, as multi-terminal VSC HVdc systems continue to be implemented, modeling for simulations programs will need further development, discussion between industry and research communities, and eventually validation against field measurements.

3.2.1 Modeling Gaps: Steady State

We can illustrate the modeling "gaps" with a simple example inspired by the 2011 blackout. We again look to the WECC for our hypothetical case.

Suppose the summer heat has led to a large amount of air-conditioning load in the south-west. Background conditions are routine: the San Onofre nuclear station is no longer operating (it is being decommissioned), and the region has to import a considerable amount of power. Two generators in the south (Etiwanda generators #3 and #4) are out for maintenance. Under these conditions, Path 15 is operating near its limit because one of the 500 kV lines is out of service. When the Alamitos generating station trips off-line, Path 15 becomes overloaded. Loading on the California Oregon Intertie increases near its limits when more power is brought from the Pacific Northwest.

Suppose that the Pacific dc Intertie is being operated below its maximum capacity with a reserve of 500MW. When the Alamitos generator trips off, this reserve can be scheduled by operators in control centers to mitigate the overload at path 15, by bringing more power from the Pacific Northwest to Southern California. Table III describes the static performance of the WECC system obtained with power flow simulations of the full WECC system using PSLF. Path loading is expressed as percentage of the normal rating in parenthesis in the table. Path 15 and the California Oregon Intertie are monitored in this example in addition to the Pacific dc Intertie.

Table III Simulation results, steady state

Case1: Initial case (500 MW reserve in Pacific dc Intertie)	Power through Pacific dc Intertie	2520 MW (81%)
	Loading at path 15 (North-South)	578 MW, 186 MVAr (30%)
	Loading at California Oregon Intertie	4094 MW, 381 MVAr (86%)
Case 2: Post disturbance (470 MW trip off-line at Alamitos generating station)	Power through Pacific dc Intertie	2520 MW (81%)
	Loading at path 15 (North-South)	933 MW, 187 MVAr (55%)
	Loading at California Oregon Intertie	4447 MW, 349 MVAr (93%)
Case 3: After scheduling control (operators use reserve in HVdc line)	Power through Pacific dc Intertie	2981 MW (97%)
	Loading at path 15 (North-South)	596 MW, 165 MVAr (31%)
	Loading at California Oregon Intertie	4120 MW, 380 MVAr (86%)

Consider the system from the point of view of the operator. In the initial case, the loading on the California Oregon Intertie (COI) is high, but not alarmingly so. Following the loss of the generator at Alamitos the COI loading is barely acceptable, as there is no margin left. (The operators would know in more detail than this whether the situation was acceptable or not, as their contingency cases are recalculated and updated frequently.) A re-scheduling of the dc line resolves the problem, however.

Under the scenario described, having reserves in the Pacific dc Intertie present reliability advantages, however, the capacity of the dc line is underutilized in normal conditions.

Now suppose there was a dc network like the one presented in Figure 16. There are two main advantages of a dc network in this situation. First, the HVdc network allows dc transmission reserve to be shared among the dc lines in the network. And secondly, power can be brought not only from the Pacific Northwest but also from the other regions with high generation availability where there are converters, like Montana and Utah. In order to analyze that situation, the software would have to be able to model multiple dc lines, a feature beyond its present capability.

3.2.2 Modeling Gaps: Dynamic

The scenarios above represent steady state solutions after contingency and after operator action. To analyze dynamic performance of these transitions between steady states, transient stability simulations can be used. In particular, the dynamic behavior of the system when the Alamitos generation is suddenly tripped is of interest.

A significant loss of generation such as this can result in a sudden drop in frequency, and the phase angle across the ends of the system can change quickly, triggering instability because of low damping. The power system is ordinarily designed and operated to cope with such an eventuality. For example, the graph in Figure 18 shows an actual event on the WECC, as observed by several PMUs.

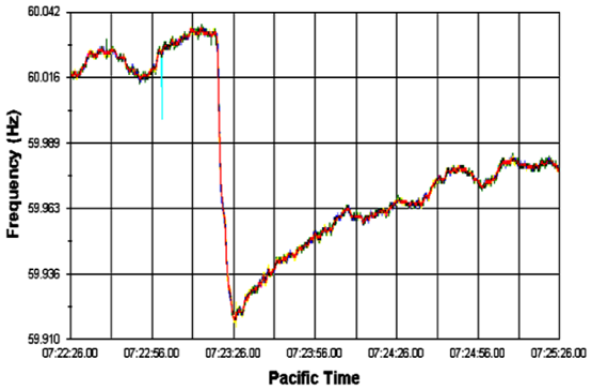

Figure 18 Loss of large generator on the WECC system

The dynamic response of the Pacific dc Intertie as it exists today can be obtained by simulations as shown in Figure 19 and Figure 20. Figure 19 show two curves of frequency dynamic response after tripping the Alamitos power station. It can be seen that the frequency is not the same at each end of the dc line. Figure 20 shows the response of the current control of the Pacific dc Intertie. It can be seen that the power through the dc line is maintained constant.

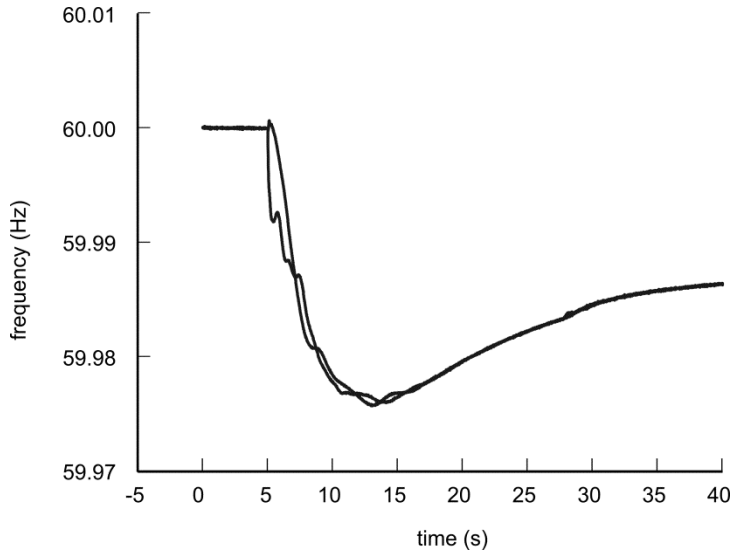

Figure 19 Simulated loss of generator in WECC

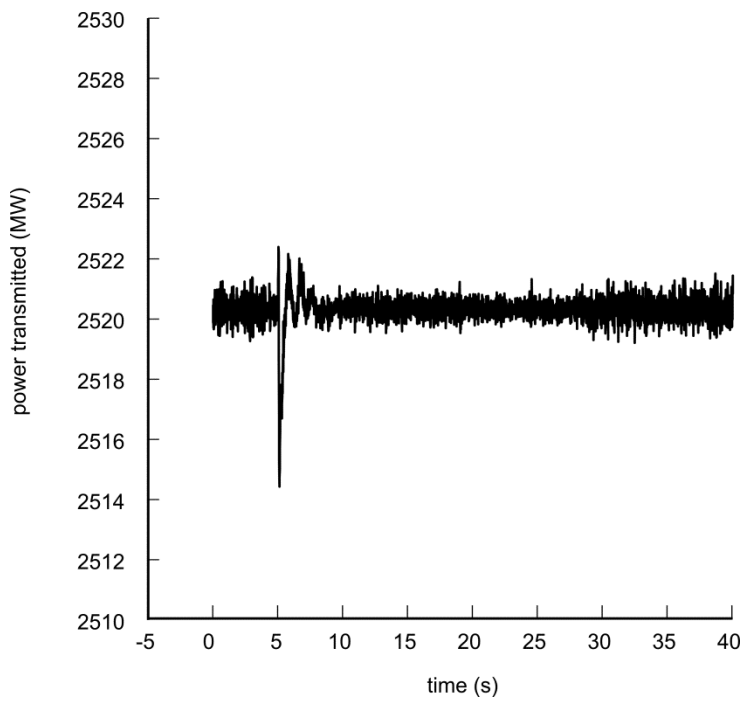

Figure 20 Dynamic response of power transmitted through the Pacific dc Intertie

Considering again a scenario of an HVdc network like the one presented in Figure 19, from the dynamic control viewpoint, the dc network could act so as to "soften the blow" when the Alamitos generator relays out. Under control based on information from the phasor measurement units in the region, the angle between the south and the north of the WECC could be transitioned gradually, with good damping at all times. In addition the dynamic response could also be coordinated with other regions, like Montana and Utah

This section has illustrated potential scheduling and dynamic performance benefits of dc networks using simulation capabilities available in industry grade simulation software to simulate the WECC system. To represent HVdc VSC multi-terminal dc networks, further model development is needed. Such development should be done to allow generic models for research and feasibility studies in most industry grade simulation packages, and permit implementing industry-tested models of dc networks as they become available.

3.2.3 Interaction between ac and dc sides

There will be a need to operate the dc lines in a dc network with some amount of reserve. Most parts of the system are operated with some reserve: the amount of reserve is calculated as part of the greater system. The use of the reserve might be as a slow release, gradually easing the overload on Path 15 in the example of an overload of power flowing into the Los Angeles region, or it might be as a rapid action, preventing some transient instability problem.

The first approach, having the dc respond relatively slowly to the drop in generation, could use system frequency as an indicator of need, and a system like FNET operating independently to ascertain in real time the appropriate action. The second approach requires coordination in advance: the control system of the dc network would have to be operated as part of a hierarchical protection scheme. The communications requirements of each of these kinds of coordinated action is examined next.

3.3 Communications

It is possible to operate a point-to-point dc line with no more communications than telephone between operators, but it seems that more communications will be needed to operate a dc network. Since advent of the Internet, the communications network has become for many just a “fabric” into which a message can be inserted and from which a message can be removed, more or less at will. But it is really a communication system that has been designed for a purpose.

In the design of any communication system, there are several factors that must be considered. The factors all influence what kind of network is best. For HVdc network control the factors typically include:

- How many nodes must there be, and what is the geography?
- Is the traffic symmetrical or asymmetrical?
- Is the traffic bursty or even? At what data rates?
- Apart from the transport delay, how much latency can be tolerated?
- How reliable must the end-to-end system be?
- Are there any unusual security requirements?

These factors combine to guide the network designer in terms of choosing the communications medium and the bit rate on a given channel, and in selecting the protocols to use. It has to be accepted that no com-munications system can give 100% guarantee of reliability, so the system designer must also choose what the system is to do in the event that the communications system fails in some way. (Those failure modes are an interesting study in themselves. From our present point of view, they affect the way the ac/dc control should react.)

Whether or not the communications system will be a point-of-failure for the dc scheme has yet to be understood. It may be that a graded system of dependence on communications is possible, and that the capability or flexibility on the power side will have to be diminished as the communications gets worse.

Can a commercial communication network be used? For example, if the Internet is to be used to carry control traffic for a dc network, do all the intervening nodes and protocols allow the use of VPN to ensure adequate security? (It may be noted, for example, that the 2008 version of IEEE 1588 (PTP) makes no mention of VPN, so presumably a PTP application that is compliant with the 2008 standard would not know how to handle VPN.) The matter is presently being considered in the IEEE 238 Working Group (power system representation to IEEE 1588).

These are matters for future study as part of this ongoing endeavor.

3.4 Protection

Protection, or protective relaying, is the term used to describe the set of hardware and software that keeps people and equipment safe in the event that the power system enters an off-nominal condition. Since the number of possible off-nominal conditions is enormously large, the topic is enormously complicated. Nevertheless, the principles are simple enough.

While methods of protecting ac power systems are well developed, the same cannot be said of dc networks, since they do not yet exist. Further, the possibility of interaction between ac and dc protection systems is a matter of some concern to relay engineers. We introduce the topic of protection in a general way in Appendix D. The reader who is somewhat familiar with protective systems may skip that Appendix and continue here.

Our purpose here is to show that because the dc side of the system is managed by a fast-acting control system, protectin schemes for ac/dc systems must cross the boundary that usually separates protective relaying from control. We discuss this somewhat preliminary idea of ac-dc interaction in terms of protection by means of the example of Figure 21. It is our expectation that some new and interesting problems will become evident when the dc control system is part of a network.

In the Figure, we show altogether five protection zones. As is traditional in these matters, some of them overlap somewhat. The representation is a little unusual, as we have shown the CTs and PTs as points of commonality of the zones. It is well-known that the CTs and PTs fix one point of the zone boundary, but the diagrams are often not drawn to show that aspect. For example, a bus differential scheme requires two CT sets. It can protect anything in between those CTs, but nothing that is even slightly outside.

The Figure shows the kind of protection that can be implemented in the zones shown, but not all the necessary instrumentation is shown. The diagram is a simplified one.

The two CTs either side of the transformer in Zone A readily establish the boundaries of a transformer differential protection scheme. Typically they will be bushing CTs installed for the purpose. Tripping the differential scheme will trip the breaker on the left of the zone. But it must be observed that if the converter is in inverting mode, that will not clear the fault. It will be necessary to add some kind of transfer-trip arrangement to shut the converter down.

Zone D in Figure 19 can be used to illustrate a different problem. While the Figure shows that the zone could implement converter differential protection, such a mode of protection must, of necessity, involve modeling the behavior of the converter, so that an accurate value of the expected "ratio" between the ac side and the dc side can be made at any instant. The ability to make that comparison depends not only on good modeling of the converter, but also on good measurements on both sides of the converter.

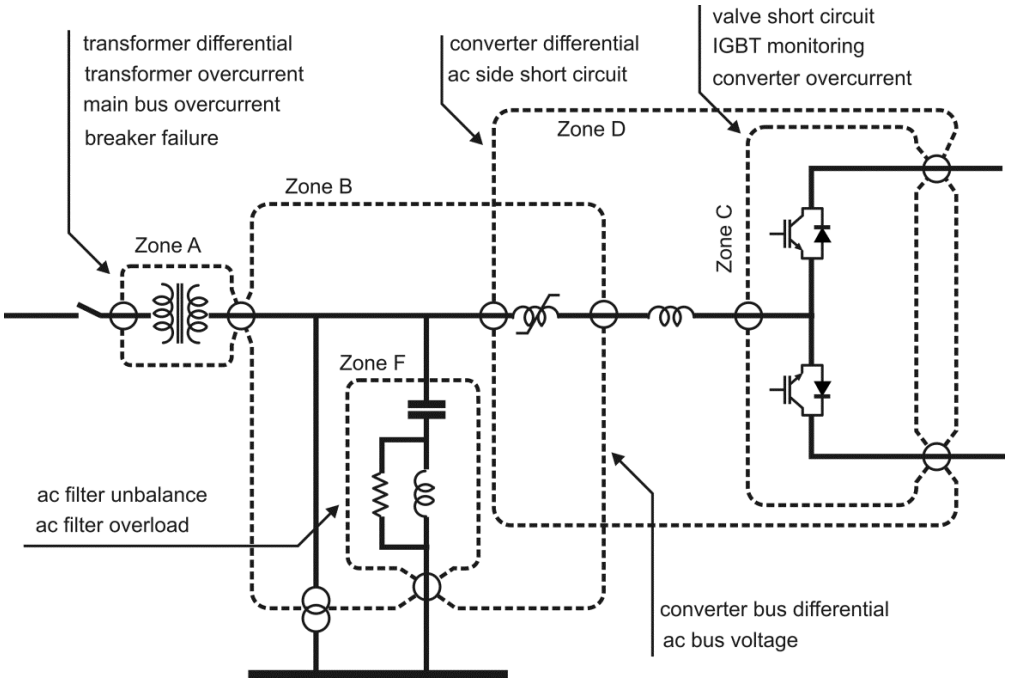

Figure 21 Hypothetical protection zones for ac side of converter

The measurement situation is somewhat intriguing. When the first England-France dc link was commissioned, the accuracy of the measuring equipment was not good enough on the dc side to allow the billing to be based on it. Instead the power on the dc side was found by measuring the power on the ac side and calculating the losses in the system. At least as recently as 2009, the situation had not changed completely. In that year, a request for proposals entitled "Metrology for High Voltage Direct Current (HVDC)" was issued by the European Association of National Metrology Institutes, calling for improvements in the measurement of most of the parameters associated with HVdc. A contract valued at almost €3M was let the following year. (We have not yet discovered what advances were made.)

Even if the billing problem is solved, the measurement requirements for protection are rather different, and it seems highly likely that advances remain to be made in this important area.

3.4.1 Special Protection Schemes

The scope of protection schemes is expanded by the use, here and there, of what are called Special Protection Schemes (SPS, in the Eastern Interconnection), or Remedial Action Schemes (RAS, in the Western Interconnection).[15] Schemes such as these are installed as a layer "above" the ordinary protective

[15] IEEE prefers SIPS for System Integrity Protection Schemes

relaying scheme, with the goal of detecting power system states that, uncorrected, would lead to stress on the power system that might have unanticipated consequences. The special protective scheme may trip lines, but it acts so as to produce *anticipated* consequences. Such schemes have a little more visibility into the overall system.

The protective relay engineers have a difficult task at the best of times, anticipating the consequences of postulated faults, and the task of anticipating collections of faults whose conditions can be defined in advance so as to trigger a special scheme is challenging in the extreme. While such schemes are widely applied, they are nowhere near as numerous or extensive as ordinary relaying schemes. And the consequences are not always anticipated, because the *totality* of the system state is not defined easily when SIPS are being set up. An example of an unanticipated SIPS action occurred in the Southern California blackout of 2008[16]:

> Eventually, in Phase 6, south to north flows on the S Line would activate a RAS that would ultimately trip more than 400 MW of generation at La Rosita and the S Line, thereby worsening the loading on Path 44.
>
> The September 8th event shows that all protection systems and separation schemes, including Safety Nets, RASs, and SPSs, should be studied and coordinated periodically to understand their impact on BPS [bulk power system] reliability to ensure their operation, inadvertent operation, or misoperation does not have unintended or undesirable effects.

If existing SIPS are under scrutiny for being inadequately studied and coordinated, how much more complex will the situation become with a dc network involved. At least the dc side should be predictable!

3.4.2 The need for a breaker on the dc side

There remain in some minds questions about the need for a dc circuit breaker. There are natural current zeroes in ac systems. Even during a fault on a line, the current goes to zero about every half cycle. That considerably affects the design of a circuit breaker.

Since direct current from a converter has no natural zeroes, the design of a circuit breaker must be radically different. The breaker question is challenging enough to invite a complete re-think of the need for a breaker at all. Opinions have been expressed on both sides of the argument ever since the work at EEI. Fairly recently, HVdc breakers have been made, and are now on the market. But with few exceptions[17] they are not installed in a power system.

The matter calls for more study, now that dc networks (albeit of modest size) are being commissioned.

---

[16] "Arizona-Southern California Outages on September 8, 2011: Causes and Recommendations" Federal Energy Regulatory Commission and North American Electric Reliability Corporation, April 2012.

[17] We are indebted to Jeff Johnson of BPA for pointing out that dc breakers are used on the PDCI for metallic return transfer schemes. A breaker is used to interrupt ground current when commutating to the metallic return path during monopolar operation. Switching while one pole is operating this way alleviates the need to block the pole, an act that would amount to a further reduction in transmission capacity.

3.5 High Voltage Insulation

It is well-known that for small gaps, and at normal pressure and temperature, air breaks down at an electric field value of about 30 kV/cm. In fact, while that is a useful thing to remember, air breakdown is a process involving several mechanisms. The breakdown in air is of particular interest to HVdc because there are differences in the way ac and dc stress work to cause breakdown. These differences mean that the design rules for ac and dc insulation systems are different. It can also be inferred that the dc systems are subject to insulation problems that have no counterpart on ac systems. In particular, the effect of pollution on insulators can become critical.

Before we examine that matter, let us look at what applies both to ac and dc.

Visible breakdown in a gas is usually termed corona. In fact, corona is the external manifestation of *partial* discharge. That means there is no complete flashover. In a nonlinear field, corona occurs on a surface when the electric field in the adjacent gas is large enough to cause electrons to rip off some of the molecules, thereby ionizing the gas. The ionized gas is then accelerated in the electric field, and collisions between molecules may cause further breakdown. The process is accompanied by a glow that can be seen if the ambient lighting is not too great. Usually, the corona is visible only near the surface, as the electric field is lower elsewhere, and breakdown is not sustained.

There are two causes of the field intensification that leads to corona. First, and perhaps most well-known, a sharp point or corner can protrude from an otherwise smooth surface. This point can be at any size, from microscopic up. Second, a “triple point” can be created where a conductor and two insulating materials with different dielectric constant come together. We will examine these in turn.

3.5.1 Point Intensification

Consider first the case of two electrodes in air. As noted above, dry air at normal temperature and pressure can withstand an electric field of about 30 kV/cm between two infinite parallel plates. Of course, plates are rarely infinitely large. Whether the value of the electric field in a practical system is lower than this critical number is a matter of clearances, and the shapes of the electrodes.

The 30 kV number assumes parallel plates that are truly flat and clean. If there are any sharp corners or nicks in the surface, there will be local field intensification, and even with a nominally good clearance, corona can occur. It is important to avoid sharp corners and edges in design, and to avoid even tiny nicks and scratches during assembly.

To see how important the intensification effect can be, consider Figure 22. Here, a pre-existing field is distorted by a prolate spheroid (the shape that results from the rotation of an ellipse about an axis). Note that the scale of the object is not given, nor the proximity to an upper electrode that might be causing the field. (The upper part of the figure is adapted from (Bridges & Preache, 1981), and the lower part from (Alston, 1968)

If a calculated surface gradient is (say) 20 kV/cm, it takes hardly any enhancement to cause breakdown. Reducing the theoretical field value may be expensive compared to keeping the surface smooth. The

implication of the intensification effect is that, for high voltages, the conducting surfaces should be smooth in appearance and feel. That accounts for the shiny appearance of the metalwork in high voltage systems, such as the surrounds of HVdc valves.

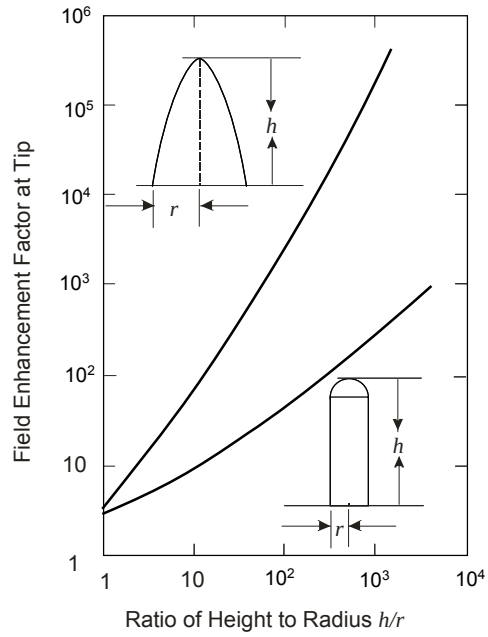

Figure 22 Field intensification due to a protrusion

3.5.2 Triple Points

Consider now the situation where there is some solid insulation involved. For example, suppose we have the same two parallel flat plates a cm apart, and we insert a piece of solid insulation the air gap. Suppose the edge of the insulation is at an angle to the surface of the electrodes, as shown in section in Figure 23 (adapted from (Kuffel & Zaengl, 1984). Air is on the left of the diagram, and the solid insulation on the right.

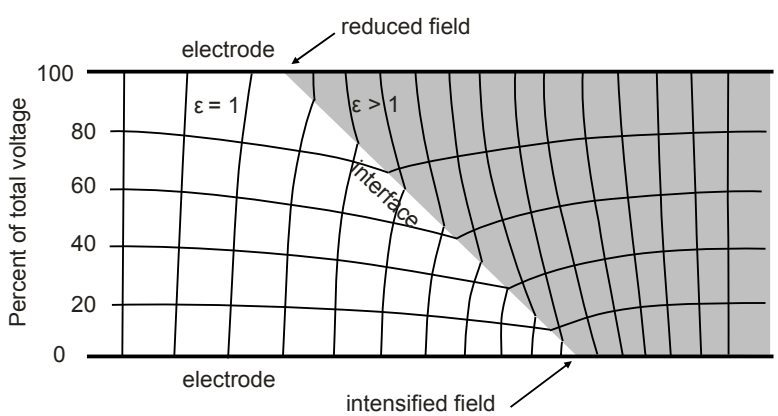

Figure 23 Triple points in insulation system (cross-section)

The insulation is assumed to fill the gap. Because solid insulation has a greater dielectric constant than air, the distribution of voltage is changed in the region of the interface between the insulation and the air,

and the otherwise uniform electric field is modified as shown. There are two “triple points” where air, insulation and conductor meet. The field is intensified (theoretically infinite) at the lower triple point. Away from the triple point, the field is higher in the air than the insulation – an unfortunate state of affairs, considering the relative breakdown strengths.

Note that at the upper triple point, where the angle included in the insulation is less than 90 degrees, the field is reduced. This effect is used to advantage when insulation thickness is tapered at the end of a high voltage cable, for example.

Figure 24 shows the effect of triple-point intensification on a corona ring resting on a fiberglass board. The corona ring is 4 cm across, and clean and smooth. It is energized at about 20 kV ac. The board is a good insulator. It is placed on top of a glass support about 14 cm tall, which is on top of a plastic support about 10 cm tall. Ground is thus nowhere near the object, and the surface field on the corona ring would be considerably below the value needed for breakdown were it not for the fiberglass board.

The corona at the triple point is clear in the photograph (which is a time exposure) but was not very visible in practice, even allowing time for the eyes to adjust to darkness. The corona was detected by PD measurement, and localized by sound.

3.5.3 Corona Rings

Sometimes it is not economically worthwhile to scale things to reduce the field near a triple point to a value that will not allow corona. Instead, the field is modified by the addition of what are called “corona rings.” A corona ring is a conducting structure added to an insulation system with the express purpose of changing the electric field distribution. Generally, the ring (sometimes called a grading ring) is toroidal, with approximately the same ratio of ring diameter to overall diameter as a quoit.

Figure 24 Effect of triple point intensification on a corona ring

Note that the intensification at this triple point can readily be reduced by supporting the corona ring away from the fiberglass. Not all triple point issues are so easily solved. Where the geometry is fixed, additional solid or liquid insulation may have to be added.

The corona ring does four things. The first three are steady-state effects.

1. By increasing the effective size of the conductor to which it is attached, it reduces the field on the outside.
2. Because it is a conducting hollow object, it reduces the field on the inside.
3. By increasing the capacitance of the conductor to which it is connected, it changes the overall charge distribution.
4. It changes the impulse response of the system.[18]

For example, the addition of a corona ring to the top of a high voltage system reduces the "point" mode of field intensification. The addition of a second ring in the same region makes the region between rings into a convenient low-field region in which connections can be made without concern for sharp points – the connections are shielded by the rings. This method is very common in high-voltage work.

In high voltage power systems, surge arresters are used as part of insulation coordination. These devices resemble insulators in appearance, long and thin, with external rain sheds. Internally, they are in essence series-connected arresters each good for a relatively low voltage. For proper operation, they should have a uniform volt-drop along the column. Since there is no current in the arrester until an overvoltage occurs, the voltage distribution is controlled by the capacitances involved. Often one or more corona rings is added to make the voltage distribution uniform. An example (from ABB) is shown in Figure 25.

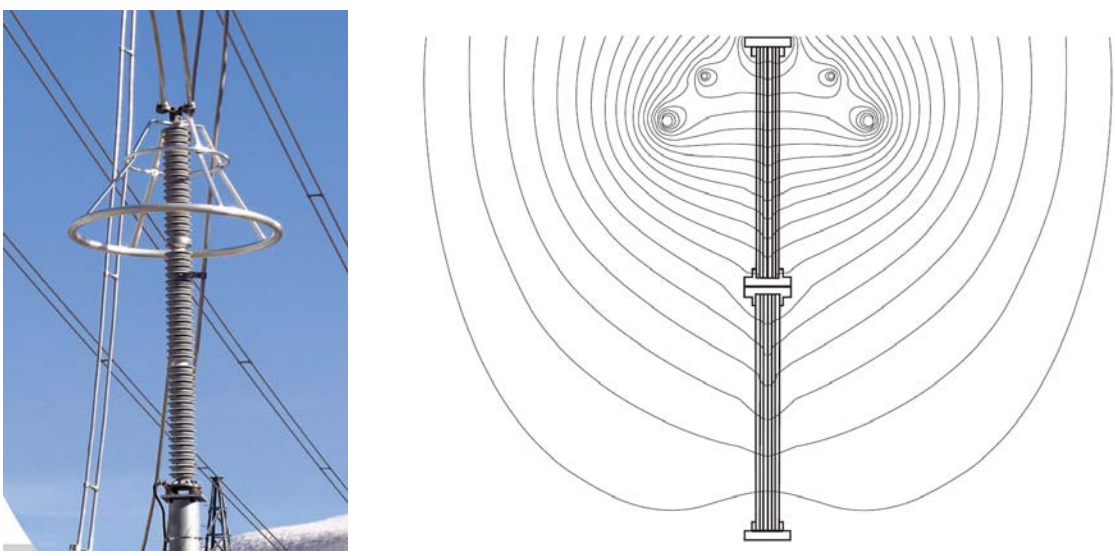

(a) (b)

Figure 25 Surge arrester with added corona rings. (a) photograph (b) field calculation

[18] Corona rings are sometimes added at both ends of an insulator with the intent of providing a conducting path in the air between them in the event of a flashover. This path would protect the insulator itself from damage. The effectiveness of the method is dependent on the risetime of the surge that causes the flashover.

The high voltage is applied at the top of the column. Normally, the electric field there would be cylindrical in shape, centered on the HV conductor. The effect of the pair of corona rings is to push the equipotential lines out and down, with a significant decrease in the field at the top of the device. The equipotential lines intersect the arrester fairly uniformly along its length.

The photograph in Figure 26 (made by author Kirkham) shows a 1 MV test transformer at the NEETRAC facility in Georgia. The transformer tank is energized, and the transformer output voltage is added to the tank voltage. To accomplish this connection, the transformer is supported on insulators, each about 2.5 m long. There are many corona rings in use, for a variety of purposes.

- The tops of the two large bushings at the left and right each have multiple rings stacked to provide a convenient low-field connection region.
- The bottom of each of these bushings is shielded by a large ring intended to protect the triple point – the interface of the bushing, the transformer tank, and the atmosphere.
- There are four rings under the tank protecting the triple points at the tops of the support insulators.
- There are four half-rings at the bottom of the support insulators, protecting the triple-points there.
- The edges of the transformer tank have been smoothed by the addition of shaped corona rings.
- In the background can be seen a pair of corona rings each made up of a number of smaller rings
- Also in the background can be seen a method for storing corona rings and cables without having them touch the ground, where their surfaces might get damaged, allowing field enhancement.

Figure 26 Cascaded high voltage test transformer

3.5.4 AC and DC Bushings

The term “bushing” is applied to the insulating system required to pass a high voltage conductor through a grounded object. This grounded object might be the wall of a building or the tank of a transformer. If the conductor is simply passed through the hole in the wall, as shown in Figure 27. The field intensification becomes quite large. Even though the wall is a hole, not a point, the cross-section shows that the boundary has the same kind of intensification.

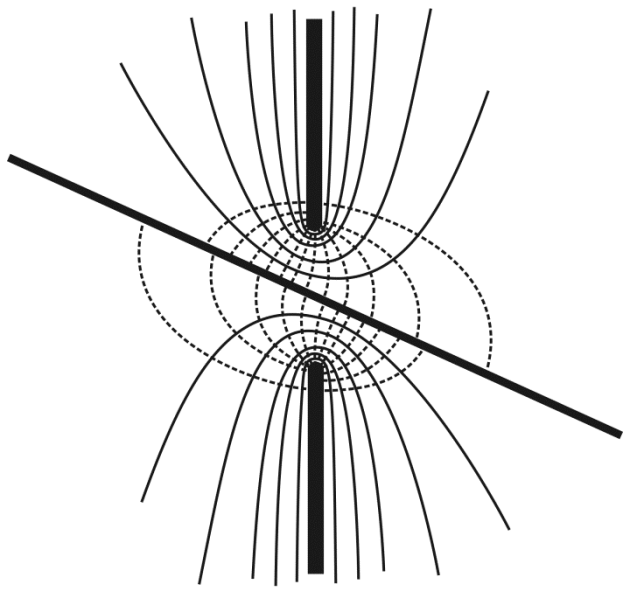

Figure 27 Conductor passing through wall, showing electric field

The problem is solved by the use of a bushing, made of some solid insulation. There are two general principles in the design of bushings. First, the solid insulation *inside* the bushing (for example oil-impregnated paper) can withstand a higher electric stress than air, and second, the likely weak point in the insulation system is the surface of the insulator (often glazed ceramic) on the side of the bushing which is exposed to the weather. Because of these design constraints, bushings tend to be long thin objects like the insulator on an automotive spark plug and, similarly, they tend to be asymmetrical, the longer insulation being on the outdoor side.

In the 1980s, the highest voltage on dc systems was increasing, as manufacturers were able to stack more and more thyristors in series. However, some unexpected flashovers were observed on high voltage dc insulators and bushings. (Unexpected because the insulators were sized appropriately and had undergone extensive testing.) These flashovers were termed “anomalous” (Lampe, Eriksson, & Peixoto, 1984). The flashovers were external to the insulator, but sometimes they caused permanent internal damage. At the least, they resulted in a temporary shutdown of the dc system of which they are a part.

For a while, no satisfactory explanation for these flashovers was found, but eventually they were reproduced under laboratory conditions. In an attempt to understand the mechanism behind HVdc bushing

flashovers, ASEA (now ABB), in Sweden, scheduled a series of tests of a high-voltage dc bushing under dry and artificial rain conditions in their high-voltage hall in Ludvika. At that point, one of the authors of this report (Kirkham, then at JPL) became involved. Kirkham's team at JPL had made an instrument that could measure the electric field in the vicinity of the bushing without greatly distorting that field.

The tests performed at ASEA were of a bushing similar to the ones used on ±600 kV systems. Altogether, this device was 15 m long, approximately 9 meters of which were on the outside of the converter station. Just how big that is can be made "real" by observing the person whose outline is below the "outside" part of the bushing in Figure 28. His hard-hat is drawn 92 cm (6 ft) off the ground.

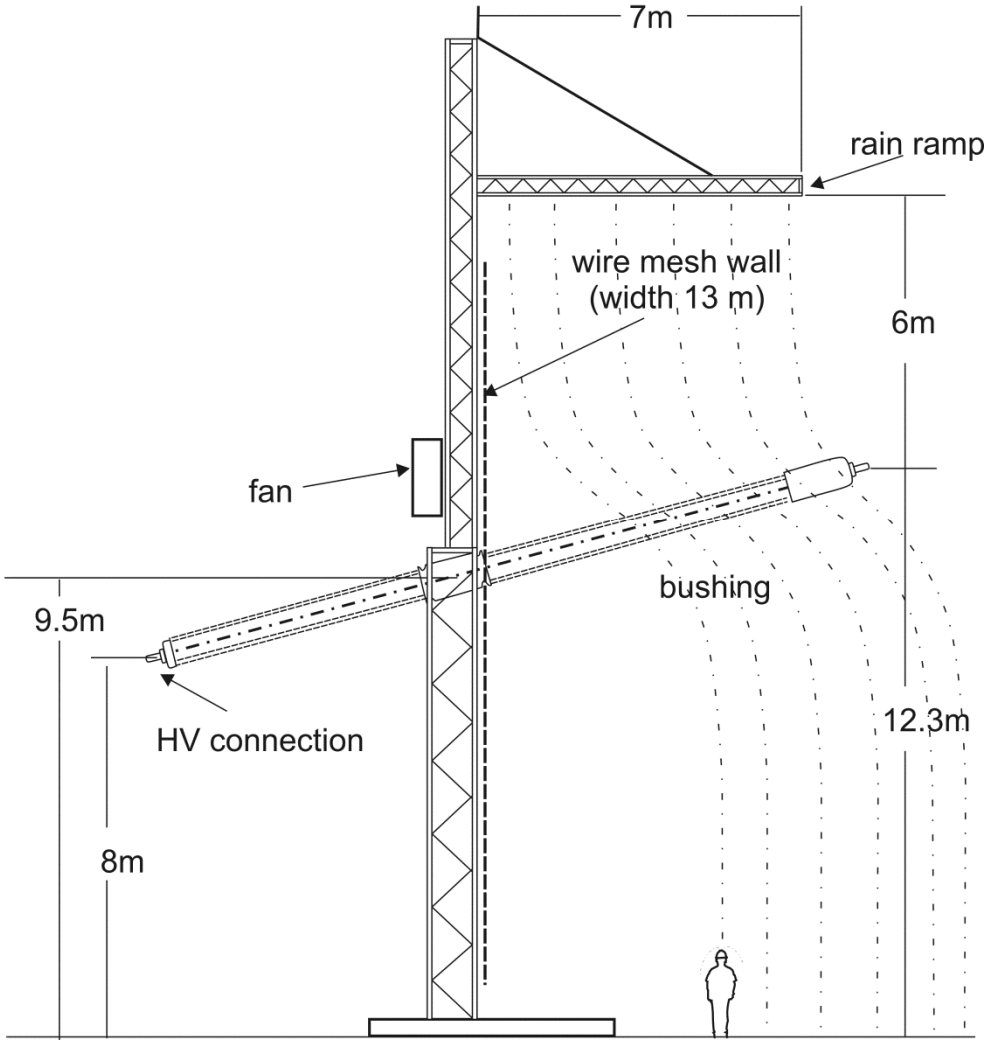

Figure 28 Bushing test setup in Ludvika

The outside of a bushing is typically "corrugated" to provide an increase in the surface distance, and to make it more difficult for rain to form a coating over the surface. These corrugations are called "rain sheds." They are represented in diagrams such as Figure 28 by outlining the bushing as two dotted lines.

In order to control the stress, and to provide a measure of insurance against material inhomogeneities, conducting cylinders are inserted into the solid insulation in the vicinity of the wall, in such a way that the radial stress is more uniform, and the axial stress is reduced near the wall. In a radial sense, these conducting cylinders have the effect of making the voltage distribution more uniform. If we visualize the system as being energized with ac, it is straightforward to see that the distribution of voltage across these cylinders is governed by the capacitance between them. The cylinders are arranged so that the product of length and radius is constant. This means that capacitance between them is constant, and so the voltage drop across them is uniform.

In an axial direction, these cylinders have a much greater effect. Instead of concentrating near the wall itself, the electric field stress is now spread out more uniformly down the length of the insulator. This can be seen from the equipotential lines in Figure 29, which is derived from a field solution calculated by an insulator manufacturer (Naito, Matsuoka, Ito, & Morikawa, 1989). Note that the equipotential lines change gradually from being parallel to the high voltage conductor on the outer end to being parallel to the wall at the inner end.

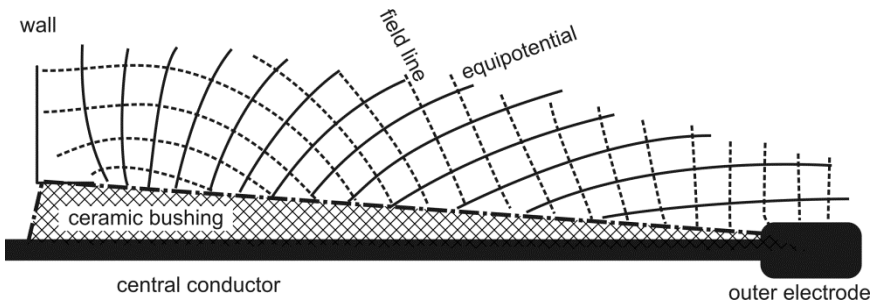

Figure 29 Field distribution outside bushing insulator

If the bushing is energized with dc, it is supposed that the distribution of voltage goes in accordance with the very large, but finite, bulk resistance of the solid insulation material, and follows approximately the same law as that given by a capacitive distribution.

The tests done in Ludvika showed that this idea of an analogy between the ac and dc performance of the bushing is not supported by measurement.

The ASEA engineers had theorized that, under some conditions of wind and weather, part of the bushing could be dry and part of it wet, and that this uneven distribution of wetting could lead to an enhanced electric field *in the dry zone* at the surface of the insulator, as compared to the field when the insulator was completely dry or completely wetted. Consequently, the tests with the rain and the fan on at the same time were designed to simulate conditions which would wet the insulator near the high voltage end, and would leave it dry near the wall.

The rain and wind combined cause a distribution of the voltage along the surface of the insulator which is far different than that which would be obtained under dry conditions. In fact, the measurement results obtained with the field meter indicate a kind of behavior with dc that has no counterpart in ac systems.

It cannot be overstressed: this kind of field enhancement would not have been widely expected. It does not happen with ac energization.

With ac energization, the voltage distribution in a large insulation system is governed by capacitance. With dc energization, the voltage distribution is governed by surface conditions. The difference comes about because bulk (volume) effects are not dominant. The resistivity of solid insulation is so high that volume-leakage is negligible.

Surface conditions are, in the case of outdoor insulation, dependent on the weather and on pollution that may accumulate. These effects are not something within the control of the designer of the insulation system. The only solution may be larger, or slightly lossy, insulators, or frequenct insulator cleaning.

3.5.5 AC and DC line design

So far, we have discussed the differences between ac and dc insulation mainly as far as the man-made insulation is concerned. For overhead lines, the bulk of the insulation is air. The principles we have so far examined allow us to understand how this insulation differs between ac and dc.

We began by examining point intensification, a mechanism that causes a local field value to exceed the general value that on might calculate for the conductor. In an overhead line, there are two main causes of point intensification: rain and pollution. Either one of these causes a surface discontinuity that results in an increased local field, and possibly partial discharge, or corona.

Rain is well-known as a cause of radio and TV interference from power lines, and of audible noise. The mechanisms of each of these effects seems to be different in detail, but the general story is the same. The rain causes a drop of water to appear on the surface of the conductor, and the shape of the drop is affected by the combination of forces acting on it. Gravity will make the drop hang from the bottom of the conductor, assuming that the conductor surface condition will allow that. (A new conductor tends to be greasy, and the water may not be able to flow well over the surface. This surface condition changes the lifetime of the drop on the surface. For the present discussion, we will consider an aged conductor in which the surface is hydrophilic.) The electric field tends to make the drop become pointed in shape (thereby intensifying the field, since the water is considered a conductor). Finally, the surface tension interacts with these other forces, and an effect is created whereby tiny droplets are ejected from the tip of the drop.

The overall effect is named electrohydrodynamics, and it was studied Lord Rayleigh as long ago as 1878 (Rayleigh, 1878). The effect is different between ac and dc fields, because the ejected drops are charged, and the behavior of the charges in the field is different. For an ac field, there is no tendency to accumulate a local charge in the space around the line, and the advent of the rain can be more or less counted on to correspond to an increase in the noise production. The same is not true for dc, where there is a tendency

for a local cloud of charge to accumulate in the region near the line conductor, decreasing the field at the conductor surface. It follows then that the advent of rain on a dc line can be more or less counted on to *decrease* the production of noise.

It might be wondered why a line that was dry might be capable of producing noise. The answer to that is pollution. In the case of power lines, pollution on a line conductor can mean any kind of surface distortion from sand and dust to bird droppings and the bodies of insects. In the case of an ac line, these things intensify the local field and go into corona. In most cases the pollution "burns" away gradually, and the noise abates. The same is broadly true for a dc line, but the pollution likely burns away without much noise generation.

Interestingly, the field intensification on a dc line can be detected even as far away as the ground. Since the field at the conductor is reduced by the generation of ions at the point, there is an ion current that follows the filed lines to the ground. The ion current can be detected as a current (of the order of nanoamps per square meter), and the ground-level field can be measured as a few percent higher than the local background field of the line.

In summary, it is fair to say that dc power lines have rather less in the way of noticeable impact on the environment (such as noise production) than ac ones, though the insulation problem in the outdoor environment is harder to solve.

4.0 Summary and Conclusions

We have examined the feasibility of HVdc networks, and found that with the advent of high power VSC converters, there is no fundamental objection to their being built. A possible problem of controllability, in terms of the required number of degrees of freedom in a control system, has been plausibly shown to have a solution, though more work is needed to make a convincing design.

We have examined the advantages of dc networks, and found them to be many. It may be that their widespread adoption will lead, eventually, to a change in the way power system planning, scheduling and operation take place.

We have found that there are some areas of the technology that require further investigation. In particular, we think that there are gaps in the ability to model the VSC converter, or a multiplicity of them, as part of an ac power system; we think further work must be done on system scheduling and operation (and that can be checked only by solving the modeling problem).

System protection is an area of considerable concern, crucial as it is to system performance. There remains much to be done, new strategies to be developed, and very likely new measurement technologies to be developed and tested. The interaction of an HVdc network with SIPS remains to be fully explored.

The need for a circuit breaker is not yet firmly established. While the technology that makes possible such a breaker has been demonstrated, there also exist bridge topologies that may obviate the need by performing the switching themselves. In the end, cost should determine the route planners take in this area. It would make an interesting study for our future work.

Improved measurement technologies may be needed still for other than protection, and it will be interesting to see whether the metrology can be made with sufficient accuracy, dynamic range and bandwidth to cover all applications in a single device.

The need for communications to achieve proper coordination in a network in which the flows are all controlled is evident. Doubtless a high-reliability network can be constructed with appropriate security and relying on sufficient redundancy. But it must be conceded that the behavior of the dc power network in the event the communications fails has yet to be fully explored.

In conclusion, we observe that the notion of a network of dc is no longer to be considered an oddity, it may be the way the grid of the future works. We would do well to consider what we can do now to have it do what we need of it then.

Appendix A. History of HVdc Technology

It is well known that at the end of the 19th century power was being used and distributed by both ac and dc. In what is sometime called the battle of the currents, ac won because a device called a transformer allowed the voltage to be increased for more efficient transmission and then reduced for safe and convenient use. While the transformer was a crucial part of the victory, the small and convenient induction motors developed by Tesla were also of major importance.

The result of these innovations was that for most of the time that there has been a power system, the power being used was mostly alternating current. But until quite late in the 20th century, some dc power was used, and conversion from the ac delivery system was needed. For many years, the only practical way to accomplish the conversion was to use a motor-generator set. A motor powered by the ac supply was used to drive a dc generator. The process was practical, but not very efficient as the overall efficiency is given by the product of the efficiency of the motor and that of the generator. Overall losses are high.

Some improvement came about with the recognition that the efficiency could be improved by combining some of the functions of the windings, and producing what was called a rotary converter. Motor generator sets and rotary converters were in use from the 1890s until the 1990s (Blalock, 2013), though they were supplanted for most purposes by mercury-arc rectifiers in the 1930s.

It was mercury arc technology that was used in the first commercial application of HVdc transmission in 1954, when ASEA of Sweden put a dc cable onto the small island of Gotland. The system was a cable of about 100 km, and a power of 20 MW, and dc was used because an ac supply would have required reactive compensation for the cable capacitance. [19]

Since then, economics and technology have led to growth in the power and distance that dc lines cover. Cable systems over 200 km long have been installed, and lines over 1000 km. Power levels have reached well over 1000 MW. This appendix will examine some of the advances in technology that have made this growth possible.

A.1 HVdc Converter/System Overview

The "ordinary" HVdc converter consists of six switching devices (called "valves") in a full-wave three-phase bridge configuration. The arrangement is shown in Figure 30.

Firing pulses are generated at some particular angle with respect to the voltage across the valves, and each conducts for a little over 120° of the cycle. Just before the end of the conduction period, another valve starts to conduct, and the direct current commutates to it, ramping down in the first valve and up in the second so that the total is constant. There is therefore a brief time each cycle that three valves are

[19] It should be pointed out that this was not the first use of dc transmission of power. According to Sykes (Sykes, 1965), a dc scheme had been installed between Moscow and Kashira about 125 km distant in 1950. In fact, the technology (and the hardware) had been appropriated after WWII from a German installation that had been planned for use in Berlin. The line was capable of transmitting 30 MW. However, the Moscor implementaion was evidently not intended to be a "normal, commercial power link."

conducting, and there is therefore a short-circuit across two transformer phases. (That puts a mechanical stress on the transformer. Transformers for HVdc are therefore built with extra mechanical bracing.)

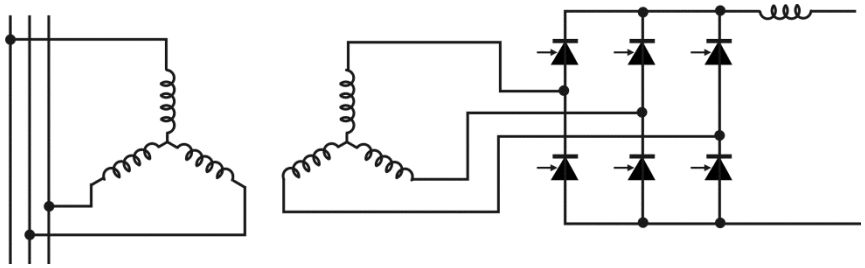

Figure 30 Full-wave three-phase bridge

The circuit is a three-phase version of the full-wave bridge. It has the effect of producing reasonably good dc (smoothed by the inductor), and it injects some distortion onto the ac side. If everything is balanced, the converter injects distortion related to the 6*n* harmonics, in other words 5, 7; 11, 13; 17, 19; 23, 25. The distortion decreases in proportion to the harmonic number. To decrease the level of distortion (so as to reduce the cost of filtering), it is customary to connect two converters in series on the dc side, fed by transformers with a 30 degree phase shift, as shown in Figure 31.

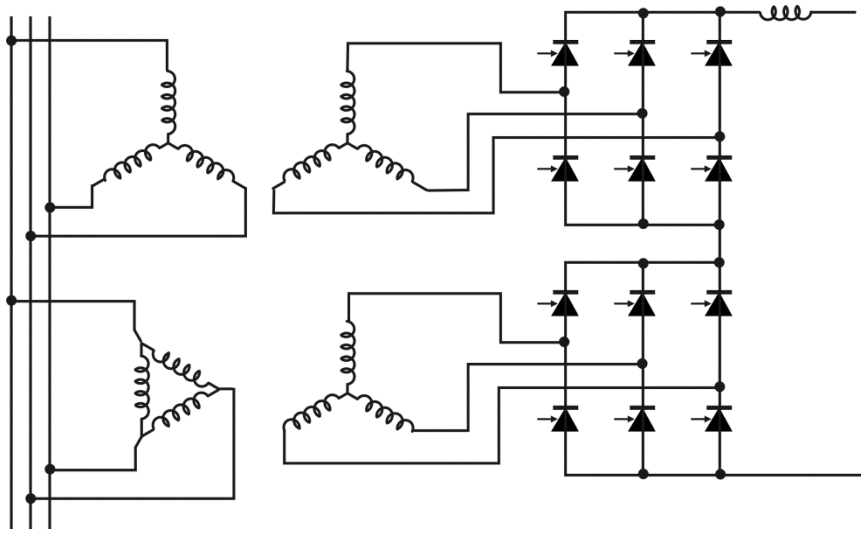

Figure 31 Customary arrangement of two converters to form a valve group

There is a kind of symmetry evident in Figure 31. It would be possible to connect the center point of the two converters to ground, and thereby establish a system that produced voltage on the positive and negative side of ground. This is called a bipole configuration.

It is worthwhile, at this point, to discuss briefly how dc converter controls are operated. While this description is restricted to the operation of current-sourced converters, the information here will provide a background to the discussion of networked operation later. To ensure stable operation even without end-

to-end communications in the control system, the ends of the dc line are designated rectifier and inverter, and controlled separately.[20] Figure 32 shows how the control systems interact to give a defined operating point.

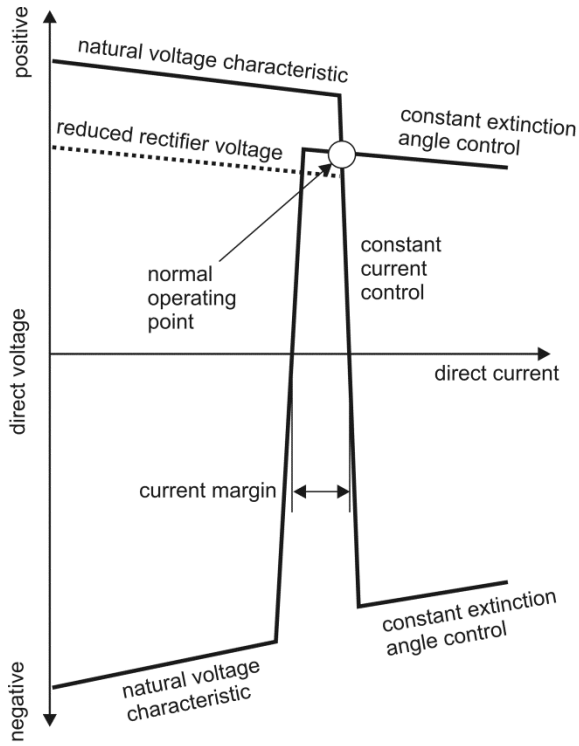

Figure 32 Converter control characteristics

At the top left of the diagram, the rectifier is operated with the valves fired a few degrees after the voltage across them becomes positive. If this delay angle, usually known as α, is kept constant as more current is taken from the rectifier, the voltage on the dc side will droop, producing what is called the natural voltage characteristic. The main reason for the droop is not resistive voltage drop, it is the wider "notches" in the valve voltage as the commutation process takes longer for greater current (see Figure 36 and Figure 37).

On the inverter end, a small angle is required after the valve turns off and before the voltage across the valve becomes positive: this is designated the extinction angle, and given the letter γ. The angle should be made as small as possible in order to minimize the reactive power consumption at the inverter, which is numerically about 40 or 50% of the real power.

The two characteristics shown in Figure 30 are predetermined by the control system designer. While other options are possible, we can use these as representative. The operating point is expected to be at the location of the open circle where the two characteristics intersect. The rectifier is controlling the current,

[20] It is appropriate here to comment on something that seems rarely if ever to be openly stated. In a dc line of 1000 miles (1600 km) length, a signal generated at one end cannot be received at the other end in less than about 5 ms, and likely more depending on the communication system. For a control system attempting to control converter stations at each end of the line, that 5 ms is a delay that makes conventional control impossible. It is essential to keep this inevitable delay in mind as we move forward to look at control options.

and the inverter is in minimum reactive power mode. If it should happen that the ac-side voltage at the rectifier end falls significantly, the roles of the two control systems will automatically switch. No communication is required. The rectifier will operate on its natural voltage characteristic, and the inverter will take over current control. The overall power transfer will be reduced, but operation will not be impacted significantly.

A.2 Technology of direct current systems

It is expected that new converter technology and new operating methods, factored in with the reliability and flexibility bestowed by networking, will allow the technology of power delivery to experience a sea change in the not-too-distant future. The technology known as Voltage Source Converters is going to have a major impact. Anticipating that impact is one of the goals of this Report.

To introduce the new technology, we begin with a brief review of the old.

A.2.1 Current-source converters

The conventional HVdc converter is a three-phase device consisting of six switching devices (called "valves") in a full-wave three-phase bridge configuration. The arrangement is shown in Figure 33.

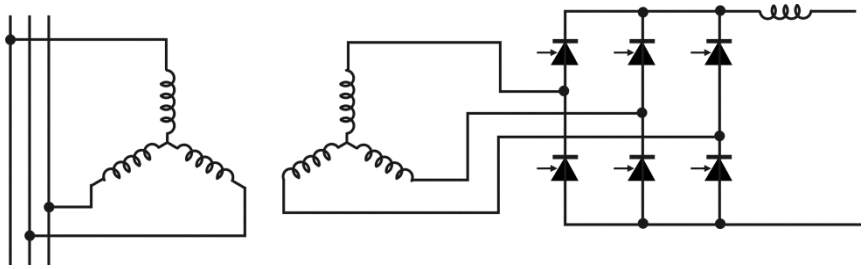

Figure 33 Full-wave three-phase bridge

Converters of this kind were first used in commercial electric power delivery based on rectifiers using mercury arc technology. This was the dominant technology during the middle years of the 20th century.

A.2.1.1 Mercury arc converters

A low-pressure mercury vapor in an arrangement like a radio tube (called a valve except in the US) can be triggered into conduction. With low power levels, the devices are quite small. Some, using the B9A base common in radios, were used in industrial control. Figure 34 shows a pair dating from the 20th century.

Figure 34 Thyratron tubes (valves), as used in industrial control

The thyratron is a diode but is typically a three-electrode device. It has the characteristic that an arc from anode to cathode is inhibited by the negative voltage on the control grid. Once this reverse bias is removed, an arc is allowed that can be extinguished only by making the voltage across the device reverse polarity. It is this characteristic that obliges the current in the converters shown in Figure 21 and Figure 26 to commutate from valve to valve, without interruption.

Scaled up, mercury arc technology reached current levels of 1800 A and 150 kV per bridge on the Nelson River scheme, built in stages between 1972 and 1977. Figure 23 shows the valve hall of the Nelson River Project.

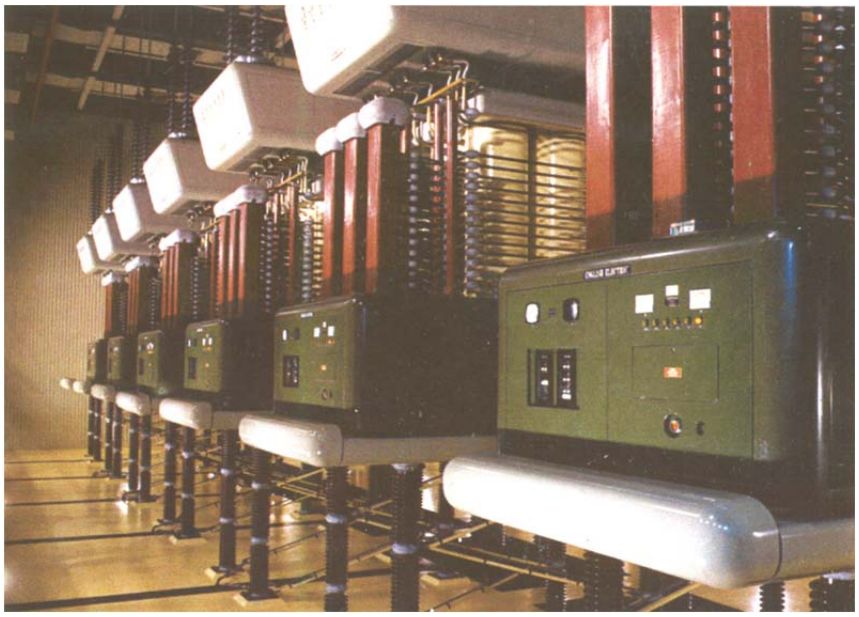

Figure 35 Nelson River Valve Hall

The technology of mercury arc valves developed no further. During the 1960, a number of companies were developing a competing technology. However, let us here complete the story of the mercury-arc rectifier.

An arc is triggered in low-pressure mercury vapor, where Townsend breakdown creates multiple carriers in the vapor. The electric stress in the vapor is reduced in the cathode region by the action of the grid electrode, and the arc is prevented from initiating. However, once the reverse bias is removed from the grid, the breakdown begins and can not be stopped by further grid voltage action. Only removing the forward voltage across the device interrupts the arc..

In operation, firing pulses are applied to the grid of the rectifiers, and each conducts for a little over 120° of the cycle. Just before the end of the conduction period, another valve starts to conduct, and the direct current commutates to it. The term comes straight from the action of the commutator in a rotary converter and a dc motor. The commutation process is equivalent to the brushes bridging two commutator segments, and it results in a ramping down of the current in the first valve and up in the second so that the total is constant. There is therefore a brief short-circuit across two transformer phases.[21] The short circuit produces commutation "notches" in the voltage across the valve, as shown in Figure 36 and Figure 37.

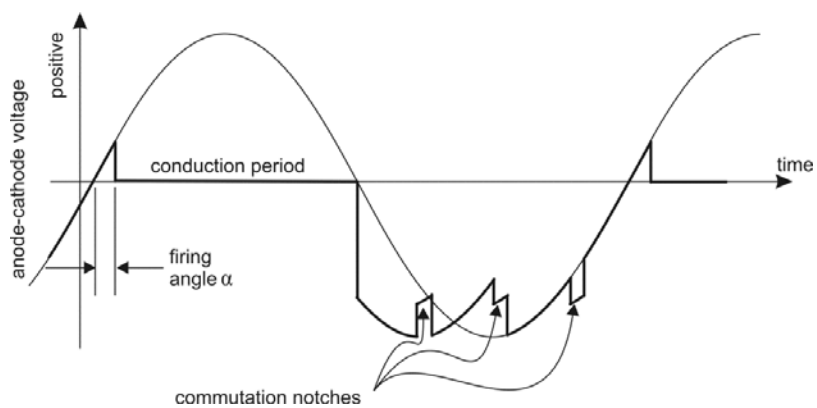

Figure 36. Valve voltage, rectifier

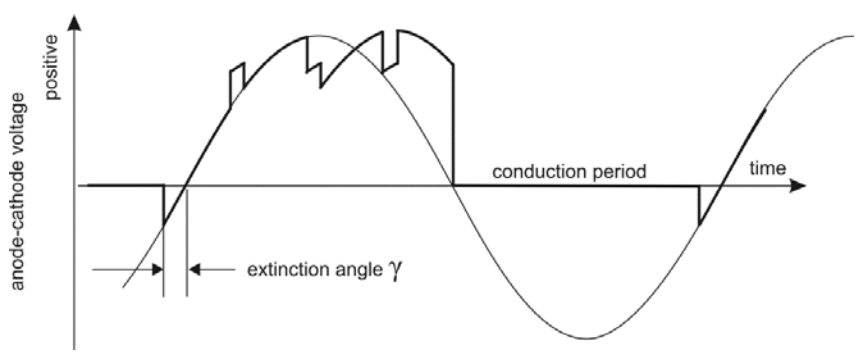

Figure 37. Valve voltage, inverter

[21] That short circuit puts a mechanical stress on the transformer. Transformers for HVdc are therefore built with extra mechanical bracing.

Mercury arc technology reached high current and voltage levels by the use of multiple anodes in each valve, and by making the valves large. On the Nelson River scheme, built in stages between 1972 and 1977, ratings of 1800 A and 150 kV per bridge were achieved.

A.2.1.2 Solid-state converters

By the time Nelson River was under way, silicon was becoming the preferred switching material, and devices called either SCRs (silicon controlled rectifiers) or thyristors (named by similarity with transistors) were being used in series-parallel arrangements for very large currents and voltages. Each of these devices might be able to handle a few kV and a few kA, but they can be arranged in series and parallel to obtain ratings that can exceed even the biggest thyratron. An example of a module of thyristors is seen in Figure 38. Modules such as this are made to be assembled into groups that are used in series to constitute a valve in the HVdc converter.

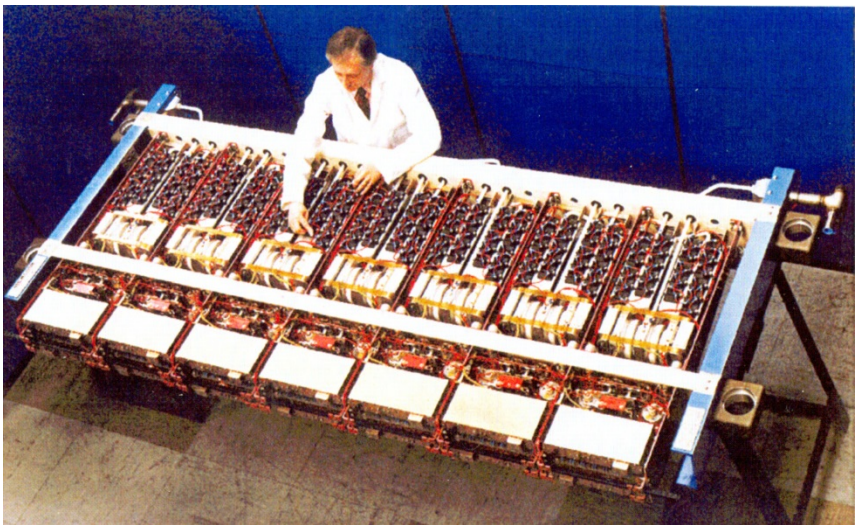

Figure 38 Thyristor valve module

Two separate advances in thyristor technology should be mentioned. One is triggering by means of light. The idea is simple: light introduced carriers into a semiconductor device, turns it on. The effect is used in phototransistors: some early transistors were encased in glass, and had to be painted black to prevent ambient light affecting operation. Scaled up, and applied to thyristors, it is obvious that from a fiber optic could be used to trigger the device.

It turned out that the process was far from simple to engineer, largely because the spot of light from a fiber optic is so small, but it was eventually done. A number of manufacturers have such a product available, with ratings at almost the maximum for thyristors. However, the hoped-for simplicity of optical firing seems not to have materialized, and the devices are complex to design, and may have other drawbacks.

From the 1970s until the present, thyristors (some light-triggered) have been used in HVdc converters, and world-wide account for many GW of power. The converter topology and control systems are as described above.

But then things started to change again.

Beginning with a paper from ABB in 1998 (Asplund, Eriksson, Jiang, Lindberg, Palsson, & Svensson, 1998), a new topology of converter was available, based on a new switching element: the transistor. The transistor differed from the thyristor in the important characteristic that it could turn off as well as on by control action. Commutation of the current from one valve to the next was no longer necessary.

A.2.2 Voltage-sourced converters

The 1998 paper showed that a power-frequency wave could be reconstructed from dc by means of pulse width modulation (PWM), and *vice-versa.* The advantages were several, and the impact is still not fully appreciated. However, the dominance of the method may be short-lived, as another advance in technology may be poised to take over. We will look at these advances in technology in turn.

A.2.2.1 PWM converters

Figure 39 shows how a PWM convertor functions. By switching a between a positive and negative dc level, and filtering, a sinusoidal output can be produced.

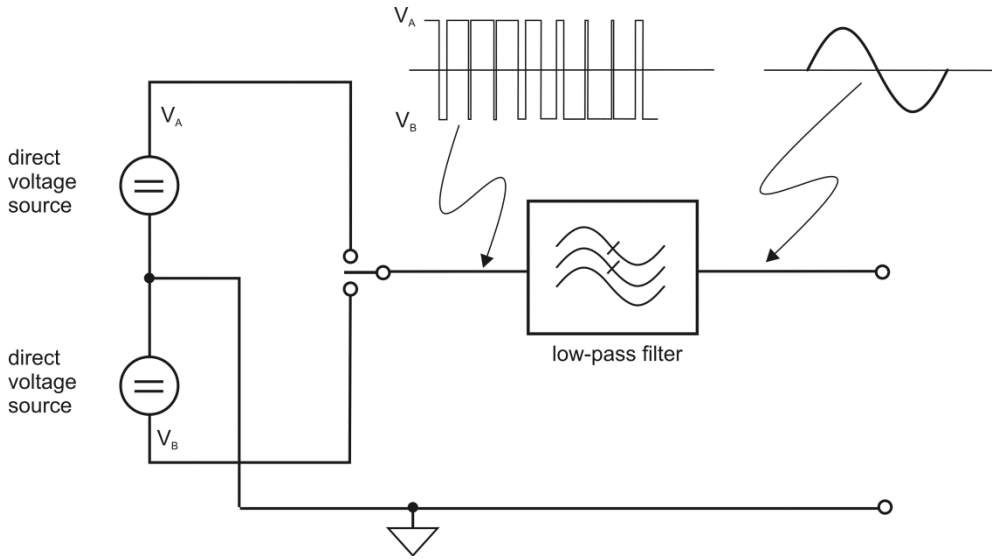

Figure 39 Pulse Width Modulation to approximate a sine-wave

One advantage of the scheme shown is that there is no need for a power-frequency system into which an inverter must operate: it can create its own. For much the same reason, the phase relationship between the ac power system and the inverter's contribution (or the rectifier's draw from the ac system) is something that does not depend on commutating a current as the voltage reverses: the converter can therefore be

operated at any power factor. That means it can be operated in any quadrant of a power/reactive power plane.

While these advantages had been anticipated, and some efforts to produce a converter of this kind had been tried earlier (one of the authors of this report – Kirkham – designed and demonstrated a four-quadrant converter based on transistor technology in 1973), they had been switching at power frequency. The converter described by ABB, based on IGBTs, was switching much more rapidly.

Advantages other than the possibility of operating in any quadrant are emerging. For example, although the overall topology of the converter is as shown in Figure 21 (a three-phase full-wave bridge), it is possible for some configurations of the IGBTs to be used to switch off the converter entirely, perhaps obviating the need for a circuit breaker. Since the switching frequency is high, the production of low-order harmonic distortion is low, and the filtering requirements are eased.

At first, the technology was called HVDC-light, and system ratings were relatively low, perhaps a few tens of MW. But since the IGBT-based system first appeared, the converter arrangements have changed, the efficiency has improved, and the rating has increased. Losses in the current source converter are typically just less than 1%, whereas the rapid switching of the PWM converter limited losses to about 2 or 3%.

A.2.2.2 MMC converters

Newer switching arrangements, not using PWM but instead synthesizing an ac voltage in steps have been developed. Early work on this kind of technology can be traced to PASC (pulse amplitude synthesis and control) in the 1990s (Donnelly & Johnson, 1995). More recent efforts have used IGBTs (Dorn, Huang, & Retzmann, 2008). One such system has been implemented in San Francisco (Westerweller, Friedrich, Armonies, Orinia, Parquet, & Wehn, 2010). Instead of switching between only two levels, the new converters have multiple levels, and can approximate the sine-wave quite well by switching incrementally. The technology is known as modular multilevel converter (MMC) technology. The new designs have meant that converter efficiencies compare with current sourced converters.

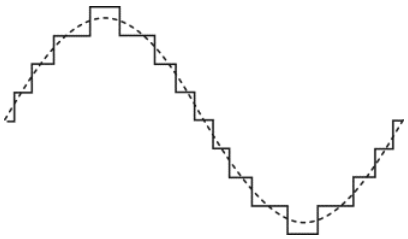

Figure 40 Modular Multilevel approximation of sine wave

Systems using these new technologies are rated up to about 1 GW are available. It can no longer be regarded as “light.” These are the systems that the authors of this report think will have significant impact on power system planning and operation.

A.3 HVdc ratings

From the 1970s until the present, thyristors (optically triggered or not) have been increasing in rating. They remain attractive for HVdc converters, and account for many GW of power. The converter topology and control systems are as described above. The ratings of individual devices are shown in Figure 41, adapted from (Huang, Uder, Barthel, & Doern, 2008). Devices with blocking voltages of over 8 kV are available, and current ratings over 4 kA.

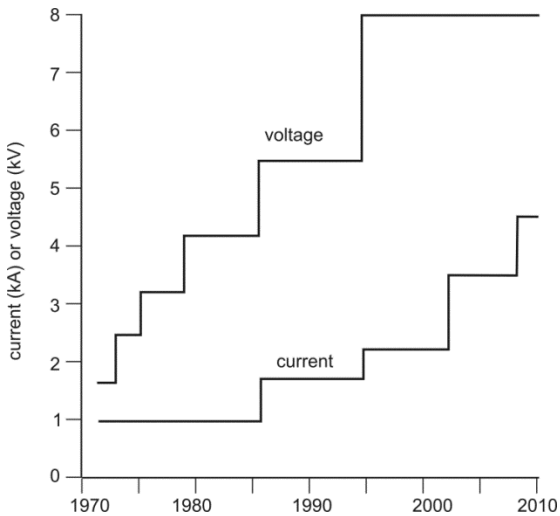

Figure 41 Thyristor voltage and current ratings, 1970 to 2010

These large voltage and current ratings mean that the complexity of the firing system is only modest, and the housings for the elements are not too large (as in Figure 38).

Figure 42 shows the interior of a valve hall at Three Gorges. The system is rated ±500 kV and 3 GW. Note that in this station, the valves are suspended from the ceiling and not supported from the floor. This design solution became popular after earthquakes in southern California damaged valves when the support insulators structurally failed..

Figure 42 Converter valves in Three Gorges Changzhou station

Appendix B. HVdc in China

No country has seen as much growth of its power system as China over the last few years. The state of HVdc in China was summarized in a CIGRE presentation[22] in September 2013 by Dr. Tang GuangFu of the State Grid Smart Grid Research Institute (SGCC). Anticipating a doubling of load by 2030, the Chinese power system has a need for bulk long distance power delivery, predominantly in a west to east direction. At present, the transfer capacity is about 350 GW, but a level of almost double that, at about 675 GW, is expected by 2030.

B.1 Overview

Table B.I summarizes the situation as of September 2013. The entries are based on Dr Tang's presentation and are listed in order of date commissioned.

Table B.I. HVdc projects in China

description	Voltage, kV	Power, MW	Commission date
Geshouba-Shanghai	±500	1200	1989
Tienshengqiao-Guangdong	±500	1800	2001
Three Gorges-Changzhou	±500	3000	2003
Three Gorges-Guandong	±500	3000	2004
Three Gorges-Shanghai	±500	3000	2006
Guiyang-Guangdong	±500	2 × 3000	2007
Gaoling BTB (1)	±150	2 × 750	2008
Linbao BTB (1)	±120	360	2009
Yunnan-Guangdong	±800	5000	2009
Xiangliaba-Shanghai	±800	6400	2009
Heihei BTB	±125	750	2009
Linbao BTB (2)	±160	750	2009
Deyang-Baoji	±500	3000	2010
Hulunbuir-Lioning	±500	3000	2010
Gaoling BTB (2)	±150	2 × 750	2011
Jingzhou-Shanghai	±500	3000	2011
Ningxia-Shandong	±660	4000	2011
Qinghai-Tibet	±400	1200	2012
Jinping-Sunnan	±800	7200	2012
Nan'ao-Guandong	±160	200	2013

The last of these entries is the relatively small Nan'ao-Gunadong system, shown by Dr Tang as being incomplete, but which is now (as of 25 December 2013) in operation as the world's first multiterminal VSC-based system.

[22] Downloaded from http://www.csee.net.cn/data/zt_aorc_cigre2013/ppt/p1_1.pdf December 2013

Table B.II lists the HVdc projects that Dr Tang showed as being underway as of September 2013, along with their anticipated date of commissioning

Table B. II. Ongoing HVdc projects in China

description	Voltage, kV	Power, MW	Commission date
Hami-Zhengzhou	±800	8000	2013
Xilodu-Zhexi	±800	8000	2014
Ningdong-Zhexi	±800	8000	2015
Zhoushan-Zheijang	±200	400/300/100/100/100	2014
Xianmen-Fujian	±320	1000	2015
Dialian-Liaoning	±320	1000	2018

The last entry in Table B.I and the last three entries in Table B.II are for converters based on VSC technology. At the moment, the Chinese seem to be planning such installations at a lower voltage and power level than the CSC converters that are now apparently expected to be built at ±800 kV and 8000 MW. A valve for even higher voltage is under development.

All in all, by 2030, the SGCC plans to have constructed no less than 27 UHV dc links, most at a level of 800 kV. The decision to use so much dc is based on considerations of an economical transfer capacity calculation, an extension of the old “crossover distance” argument used in the west for many years to show the cost advantage of dc for long-distance use.

To support this endeavor, a thyristor valve rated at 800 kV and 5000 A has been developed. It was put into commercial operation on the Jinping-Sunan line on July 19 2012, where it was given a slightly lower current rating (4500 A) for a power rating of 7200 MW on a line of 2100 km (about twice the length of the Sylmar-Celilo line on the west coast of the US). The same valve will be used on two more planned lines (see Table B.II).

B.2 Multiterminal systems

Compared to the point-to-point current source converters installed or planned in China, the number and size of voltage-source converters is small and their size is small. However, they are being planned for multi-terminal operation, perhaps cautiously. The two multi-terminal schemes in existence until December 2013 were current-source schemes, so it could be said there is no experience anywhere of multi-terminal VSC schemes. The two are between Quebec, Canada and New England, USA, and between Sardinia and Corsica, Italy. The first of these has four terminals, in parallel, but is evidently operated mainly as point-to-point. The other has a small (parallel) tap that makes it a three-terminal scheme.

The Chinese scheme at Nan'ao island was commissioned as a three-terminal system, and designed to become a four-terminal scheme later. The geography is shown in Figure 43. The location is a small island off the coast between Hong Kong and Shanghai, and west of Taiwan.

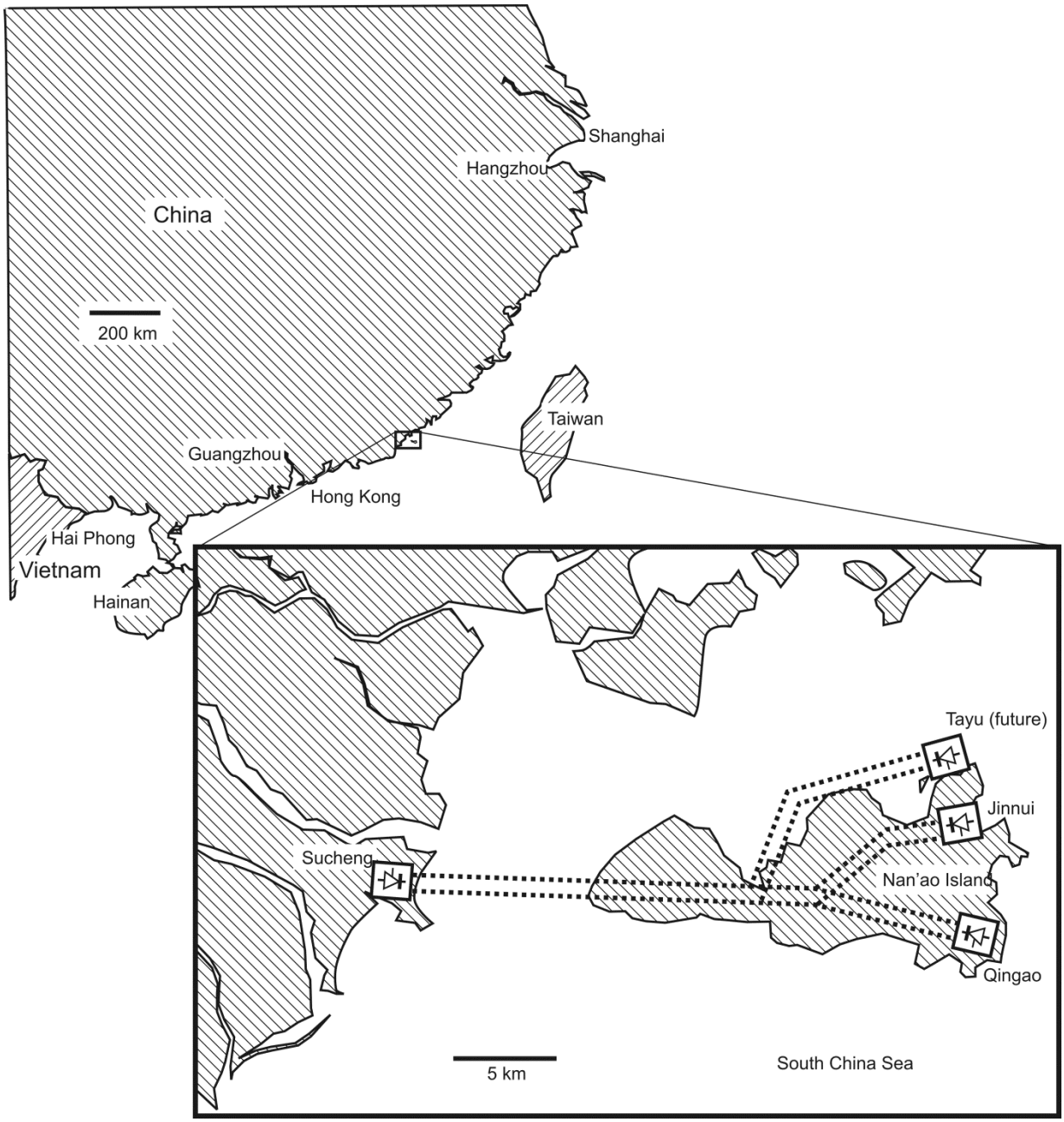

Figure 43 Geography of Nan'ao island dc network

The scheme is aimed at bringing wind power ashore. Table B.III summarizes the power levels. The network is about 40 km in extent, with land-based cable and overhead line, and submarine cable. The

topology is shown as a star-connection, but that may be just a simplification of the original drawing. As we shall see below, the next multi-terminal scheme is far from such a simple topology.

Table B. III. Nan'ao Island dc power network

description	Voltage, kV	Power, MW	Commission date
Sucheng converter	±160	200	2013
Jinnui converter		100	2013
Qingao converter		50	2013
Tayu converter		50	2014 (?)

It seems that further multiterminal systems are planned using similar technology. The Zhoushan-Zheijang scheme listed in Table B.II is a *five* terminal system, to be located on five small islands just south of Shanghai. (One of the islands, Zhoushan, is home to the East Sea Fleet.)

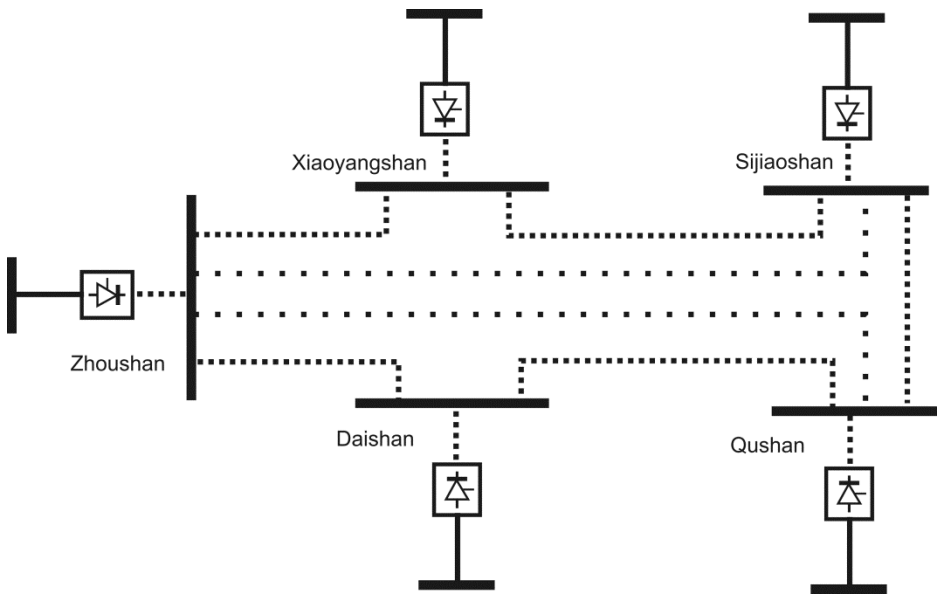

Figure 44 Zhoushan five-terminal system

In Figure 44, the two lines shown with fewer dots are to be added after commissioning, converting the loop configuration into a genuine network. The object is to increase the reliability of the Zhoushan system.

When completed, scheduled for 2014, the system will be the world's first genuine multi-terminal dc scheme, on an equal footing with an ac network in terms of redundancy of lines, and fully controllable, with the flexibility of VSC converters throughout.

Appendix C. Protection

Put simply, protection is the art and science of comparing the actual with the expected, and acting so as to de-energize something if the difference is large enough. The simplest and most obvious form of protection is the fuse. It is possible to imagine that the fuse was "invented" accidentally, when a wire somewhere melted because the current was larger than expected, though that is mere speculation.

In any event, the simple fuse illustrates the properties of the majority of the various forms of comparison in this protection matter:

- It operates autonomously, meaning often that the "expected" is pre-loaded into the device
- It operates with only local information, meaning the "actual" is from a nearby measurement

Autonomous operation is required because the reaction to the unexpected (off-nominal) conditions must be rapid. For most such conditions, there simply would not be time to obtain operator response without endangering that which is being protected, whether it is people or equipment.

Fuses are widely used at low and medium voltage (up to, say, 25 kV), but not used in high-voltage transmission systems, the subject of most of this report. We will therefore expand the discussion by introducing the concept of the relay. A relay is a well-known device is electronics, where it has the characteristic that a small amount of power (perhaps from a transistor circuit) controls a larger amount (perhaps involving a much higher voltage).

In power system protection, a relay has this same characteristic of "power gain," but the relationship between the input quantity (or quantities) and the operation of the relay is not simple. There may, for example, be a deliberate delay introduced, or a deliberate restraint on action.

Figure 45 shows a device known as a "primary relay," installed in a European power system, around 1965.

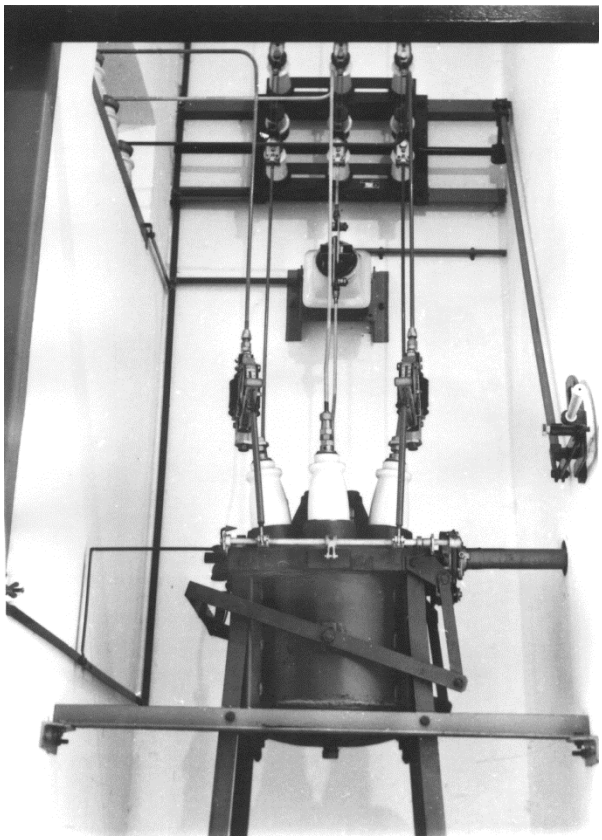

Figure 45 Primary relay in European 10-kV system, ca 1965

When the current in the relay (the "actual") exceeds the value defined as the trip point (the "expected"), the force of the magnetic circuit of which the relay is part is sufficient to trip the circuit breaker below. A series of rods and levers above the breaker move the opening contacts inside the oil container, the cylindrical object at the bottom. This has the result of opening the primary circuit. In essence, the device is a large version of the kind of thing that Americans have come to call a "circuit breaker" in the distribution panel on their house. Like that circuit breaker, this device is capable only of opening a circuit: to close the circuit, a handle is provided, here on the right of the breaker. Like the domestic circuit breaker, energy is stored in a spring, and released rapidly at the moment of opening the circuit.

The device illustrates two further principles of protection:

- There is considerable energy available in the circuitry being protected, and that energy can be utilized to produce mechanical work
- While the relay may be mechanical, devices like circuit breakers nevertheless use stored energy for their actual operation.

The primary relay was already old when the photograph here was made (in about 1965 by author Kirkham, in the Netherlands). In fact it can be thought of a several generations out of date. Electromechanical relays have been in use for well over a century. Most of them are *isolated* from the primary circuitry by transformers, though they still use the considerable energy of the "signal" to obtain mechanical work. A later generation used the same transformers to obtain signals for transistorized relays.

At present, relays are designed using digital technology, sometimes combining the function of PMU with that of digital relay and fault recorder.

A digital relay looking at the alternating current can calculate that the current in a line is increasing so rapidly that the peak current would be (say) 40 kA, and send a signal to trip a circuit breaker milliseconds *before* such a current is reached. That sort of speed means that the circuit can be isolated before even the first cycle is complete. The wear and tear on equipment, including the circuit breaker itself, is reduced if it can be tripped rapidly.

Figure 46 (photo made by author Kirkham in 2010 in the Pacific Northwest) shows a new microprocessor-based relay (blue rectangle) above an old electromechanical one (black) in a substation control house.

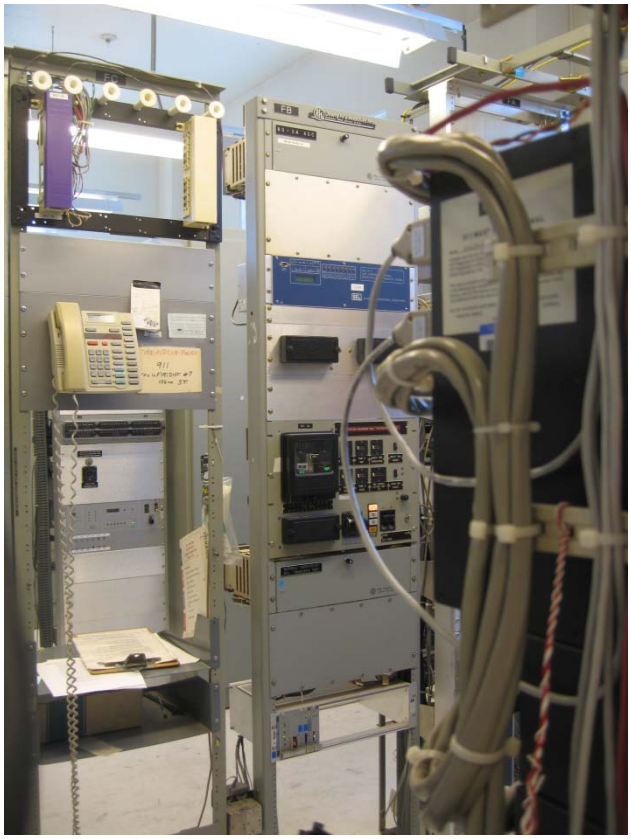

Figure 46 Old and new relays in the same rack

The blue relay in Figure 46 is in fact something a little unusual: it is what is called a “differential” relay. It compares the current at one end of a transformer or a transmission line with the current at the other. Under ordinary circumstances, these will be identical, apart from a small delay and possibly a phase angle change. If there is a fault in the transformer or the line, the currents will not be the same, as usually current will flow into the fault from both ends. The function is unusual only because there has been a tradition in power system relaying of not relying on communications. That philosophy is soundly based.

Until recently, communications has not been nearly as reliable as the power system, and to have relied on communications for the relaying system would have degraded the reliability of the power system.

Operation with only local information means that the reliability of operation – that is reliability in the sense the words are use by mission assurance people – is not adversely affected by the reliability of some communication system bringing information from elsewhere. It is worth noting that a system that operates with only local information has the handicap that it has no "big picture" information with which to work.

Because of the reluctance to use communications, considerable ingenuity has been devoted by relay engineers to performing the protection functions. To overcome the need to know the current at the far end of a line, for example, the presence of a line fault can be detected by calculating the apparent impedance from one end.

To ensure that the protection will operate when it must, most aspect are provided with redundancy, with one part automatically acting if another fails. This aspect of protective relaying has been particularly problematical because of what is known as Zone 3.

C.1 Distance Protection, Zone 3

The method of detecting faults from only one end of a line means that the relay, based on current and voltage information from CTs and PTs at one end of the line, responds to faults that may be anywhere along the line up to a distance given by what are called its "settings." The settings are the values of current and voltage (or their ratio or some other calculable parameter) at which a trip is to occur. The settings, in other words, define a zone of operation. One end of the zone is the location of the PTs and CTs. The other end is wherever the setting put it.

Typically, a distance relay will operate with its primary zone almost at the far end of the line. Only a fault at the very far end of the line will not be protected, and it is assumed that the relaying at that end will detect the fault. That will not work unless there is a possibility of infeed at the far end, so sometimes the relay settings go just *beyond* the far end of the line, and into the next line.

An additional group of current and voltage settings can cause the relay to operate as a backup in that second line. Then, in case the breaker does not operate, or the relaying is broken in some way, there is an automatic backup. The coordination of the primary[23] relaying in the second line with the backup relaying in the first line is by means of time. The backup relay is made to operate slowly, so that the primary relay has time to clear the fault, if it can.

The principle of time-based coordination can be extended to a third line in series. A hypothetical one-line for Zone 3 protection, as it is called, is shown in Figure 46. The diagram is greatly simplified: none of the circuit breakers are shown, for example.

[23] Primary here does not mean the same as it did when we looked at the old European primary relay. Use of that kind of relay was discontinued long ago. We will use the term here to mean "first."

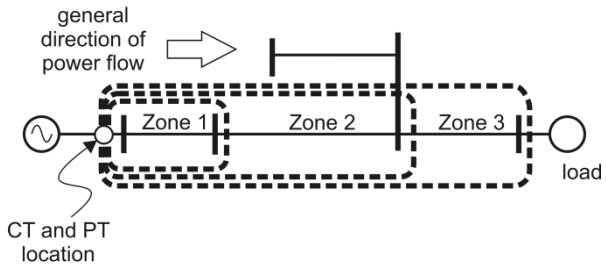

Figure 47 Three zones of protection for one set of PTs and CTs

Zone 3 of the left-most bus operates when the primary (closest) relaying fails AND the next-closest backup relay fails. For some very important piece of the power system, this third level of redundancy has been thought justified.

However, from so far away from the hypothetical fault in zone 3, it is difficult to distinguish between a large current (the expected, and acceptable when the cause is simple load) and a fault. This is because a fault at that distance will not cause a serious drop in the voltage at the first bus: and at times, when the line is heavily loaded, the voltage may droop anyway. Sometimes a zone 3 relay will trip a breaker unnecessarily. The loss of infeed to a line that is heavily loaded is never a benefit to the power system, and has been known to trigger a cascading failure.

C.2 Protection, Concluding Remarks

It has not been our intention here to give a complete survey of protection. Rather, we have illustrated the general principle of comparing the expected and the actual, and we have illustrated some of the changes made in the technology over the years. The problem with ac protection is that the expected is hard to predict sometimes. Because the relaying usually has only local information, it is not generally possible to update the settings to take account of changes to nearby parts of the power system. And yet these changes nearby may be very important for proper operation.

With the advent of dc, it may well be that the behavior of the dc side is much more predicable than that of the ac side, because the control loops in the dc system will tend to keep things constant. If this is the case, the behavior of the dc system protection may be the harder to account for, as the conditions on the ac side are less predictable.

At the time of this writing, the IEEE PES working group on interactions between ac and dc protection has just started work, and is struggling mightily with the issue.

Bibliography

Adam, G., Anaya-Lara, O., & Burt, G. (2010). Steady-state and transient performance of DC transmission systems based on HVDC technology. *9th IET International Conference on AC and DC Power Transmission*, (pp. 19-21).

Ainsworth, J. (1968). The phase-locked oscillator - a new control system for controlled static converters. *IEEE Transactin on Power Apparatus and Systems, PAS-87*, 859-865.

Alston. (1968). *High voltage technology.* Oxford: Oxford University Press.

Anderson, P., & LeReverend, B. (1996). Industry experience with special protection schemes. *IEEE Transactins on Power Systems, Vol 11 No 3*, 1166-1179.

Asplund, G., Eriksson, K., Jiang, H.-B., Lindberg, J., Palsson, R., & Svensson, K. (1998). DC transmission based on voltage source converters. *CIGRE 14-302.* CIGRE.

Beerten, J., & Belmans, R. (2013). Analysis of Power Sharing and Voltage Deviations in Droop-Controlled DC Grids. *IEEE Transactions on Power Systems,*, 4588-4597.

Beerten, J., Cole, S., & Belmans, R. (2012). Generalized Steady-State VSC MTDC Model for Sequential AC/DC Power Flow Algorithms. *IEEE Transactions on Power Systems*, 821-829.

Beerten, J., Cole, S., & Belmans, R. (2014). Modeling of Multi-Terminal VSC HVDC Systems With Distributed DC Voltage Control. *IEEE Transactions on Power Systems,*, 34-42.

Blalock, T. (2013, September/October). The rotary era, part 1. *IEEE POwer & Energy magazine*, pp. 82-92.

Bridges, J., & Preache, M. (1981). Biological influences of power frequency electric fields - a tutorial review from a physical and experimental viewpoint. *Proc IEEE Vol 69, No 9*, 1092-1120.

Bunch, R., & Kosterev, D. (2000). Design and implementation of AC voltage dependent current order limiter at Pacific HVDC Intertie. *EEE Transactions on Power Delivery, Vol.15, no.1*, 293-299.

Cao, J., Du, W.-J., Wang, H., & Bu, S. (2013). Minimization of Transmission Loss in Meshed AC/DC Grids With VSC-MTDC Networks. *IEEE Transactions on Power Systems, 28*(3), 3047-3055.

Chiniforoosh, S., Jatskevich, J., Yazdani, A., Sood, V., Dinavahi, V., Martinez, J., et al. (2010). Definitions and Applications of Dynamic Average Models for Analysis of Power Systems. *IEEE Transactions on Power Delivery, vol.25, no.4*, 2655-2669.

Cole, S., & Haut, B. (2012, August). Robust Modeling Against Model-Solver Interactions for High-Fidelity Simulation of VSC HVDC Systems in EUROSTAG. *IEEE Transactions on Power Systems, vol.28, no.3*, 2632-2638.

Cole, S., Beerten, J., & Belmans, R. (2010, August). Generalized Dynamic VSC MTDC Model for Power System Stability Studies. *EEE Transactions on Power Systems*, 1655-1622.

Donnelly, M., & Johnson, R. (1995). Power System Applications for PASC Converter Systems. *IEEE Transactions on Power Delivery, Vol 10, No 1*, 439-444.

Dorn, J., Huang, H., & Retzmann, D. (2008). A new Multilevel Voltage-Sourced Converter Topology for HVDC Applications. *CIGRE B4-304.* CIGRE.

Dougherty, J. (1970). Operating Characteristics of a Three-Terminal DC Transmission Line. *IEEE Transactions on Power Apparatus and Systems, Vol PAS-89, Mp 5*, 775-780.

Dougherty, J., & Kirkham, H. (1970). System Aspects of a Tapped DC Line with Dynamic Controls. *IEEE Transactions on Power Apparatus and Systems, Vol PAS-89, No 8*, 2066-2074.

Ekstrom, A., & Liss, G. (1972). Basic Problems of Control and Protection of Multiterminal HVdc Schemes with and without dc Switching devices. *CIGRE 14-08.*

Feng, W., Bertling-Tjernberg, L., Tuan, L.-A., Mannikoff, A., & Bergman, A. (2013). An Extended OPF Incorporating Multi-Terminal VSC-HVDC and its Application on Transmission Loss Evaluation. *POWERTECH* (pp. 1-6). Grenoble: IEEE.

Foerst, R., Heyner, G., Kanngiesser, K., & Waldmann, H. (1969). Multiterminal Operation of HVDC Converter Stations. *IEEE Transactions on Power Apparatus and Systems, Vol PAS-88, No 7*, 1042-1052.

Hammad, A., Minghetti, R., Hasler, J.-P., Eicher, P.-A., Bunch, R., & Goldsworthy, D. (2010). Controls modelling and verification for the Pacific Intertie HVDC 4-terminal scheme. *IEEE Transactions on Power Delivery, Vol 25, No 3*, 1655-1662.

Harris, L. (1965). Some Design Aspects of the Cross-Channel Power Link. In B. Cory, *High Voltage Direct Current Convertors and Systems* (pp. 175-218). London: MacDonald.

Howe, B., Kirkham, H., & Vorperian, V. (2002). Power system considerations for undersea observatories. *IEEE Journal of Oceanic Engineering, Vol 27,*, 267-274.

Huang, H., Uder, M., Barthel, e., & Doern, J. (2008). *Application of High Power Thyristors in HVDC and FACTS Systems.* Retrieved October 21, 2013, from Siemens: http://www.ptd.siemens.de/080731_Paper262_cepsi08_valve_final.pdf

Johnson, B., De Mello, F. P., & Undrill, J. (1982). Comparing Fundamental Frequency and Differential Equation Representation of AC/DC. *IEEE Transactions on Power Apparatus and Systems, vol.PAS-101, no.9,*, 3379-3384.

Kirkham, H. (2009). Current measurement methods for the smart grid. *IEEE PES General Meeting* (pp. 1-7). Calgary, Alberta, Canada: IEEE.

Kuffel, E., & Zaengl, W. (1984). *High Voltage Engineering.* Oxford: Pergamon Press.

Lampe, W., Eriksson, K., & Peixoto, C. (1984). Operating Experience of HVDC stations with regard to natural pollution . *CIGRE papper 33-01*.

Lampert, M., & Mark, P. (1970). *Current Injectoin in Solids.* New York: Academic Press.

Lefebvre, C., Gole, A., Reeve, J., Pilotto, L., Martins, N., & Bhattacharya, S. (1995). Working group on dynamic performance and modeling of DC systems and power electronics for transmission systems. Report on test systems for AC/DC interaction studies. *IEEE Transactions on Power Delivery, vol.10, no.4*, 2027-2034.

Liu, Y., Watson, N., Zhou, K., & Yang, B. (2013a). Converter System Nonlinear Modeling and Control for Transmission Applications—Part I: VSC System. *IEEE Transactions on Power Delivery, vol.28, no.3*, 1381-1390.

Liu, Y., Watson, N., Zhou, K., & Yang, B. (2013b). Converter System Nonlinear Modelling and Control for Transmission Applications—Part II: CSC Systems. *IEEE Transactions on Power Delivery, vol.28, no.3*, 1391-1401.

Macfie, P., Hurlock, P., Taylor, G., & Irving, M. (n.d.). Multi-Objective Sec urity Constrained Optimal Reactive Dispatch Applied to the GB Transmission Network.

Naito, K., Matsuoka, R., Ito, S., & Morikawa, S. (1989). An investigation of the horizontally-mounted insulators for HVDC stations. *IEEE Transactions of Power Delivery, vol 4, No 1*, 653-666.

Peralta, J., Saad, H., Dennetiere, S., Mahseredjian, J., & Nguefeu, S. (2012). Detailed and Averaged Models for a 401-Level MMC–HVDC System. *IEEE Transactions on Power Delivery,vol.27, no.3*, 1501-1508.

Rayleigh. (1878). On the Instability of Jets. *Proc Math Society of London, Vol 10*, 4-13.

Saad, H., Peralta, J., Dennetiere, S., Mahseredjian, J., Jatskevich, J., Martinez, J., et al. (2013). Dynamic Averaged and Simplified Models for MMC-Based HVDC Transmission Systems. *IEEE Transactions on Power Delivery, vol.28, no.3*, 1723-1730.

Silva, B., Moreira, C., Seca, L., Phulpin, Y., & Peas Lopes, J. (2012). Provision of Inertial and Primary Frequency Control Services Using Offshore Multiterminal HVDC Networks. *IEEE Transactions on Sustainable Energy*, 800-808.

Sykes, J. (1965). Future Possibilities of HV DC. In B. Cory, *High Voltage Direct Current Convertors and Systems* (pp. 241-262). London: MacDonald.

Teeuwsen, S. (2009). Simplified dynamic model of a voltage-sourced converter with modular multilevel converter design. *EEE/PES Power Systems Conference and Exposition, 2009*, (pp. 1-6).

Vrana, T., Yang, Y.-T., Jovcic, D., Dennetierre, S., Jardini, J., & Saad.H. (2013, October). The CIGRE B4 dc grid test system. *Electra*, 10-19.

Weber, J. (n.d.). *Multi-Terminal DC line Dynamic Model for the Pacific DC Intertie*. Retrieved February 13, 2014, from PowerWorld Corporation: http://www.powerworld.com/files/04WeberDCLine_PDCI.pdf

Westerweller, T., Friedrich, K., Armonies, U., Orinia, A., Parquet, D., & Wehn, S. (2010). Trans bay cable – world's first HVDC system using multilevel voltage-sourced converter. *CIGRE B4_101_2010*. CIGRE.

Distribution

Michael Bahrman, ABB Grid Systems, mike.p.bahrman@us.abb.com

Ronnie Belmans, Katholieke Universiteit Leuven, Ronnie.Belmans@esat.kuleuven.be

Joe Eto, Lawrence Berkely National Laboratory, JHEto@lbl.gov

Jay Giri, Alstom, jay.giri@alstom.com

Jeff Johnson, BPA, jmjohnson@bpa.gov

Dmitri Kosterev, BPA dnkosterev@bpa.gov

Dirk Van Hertem, Katholieke Universiteit Leuven, Dirk.VanHertem@esat.kuleuven.be

Tom King, ORNL, kingtjjr@ornl.gov

Neil Kirby, Alstom, neil.kirby@alstom.com

Wayne Litzenberger, Power Engineers, wayne@spiritone.com

B. Mehraban, (Chair IEEE HVdc/FACTS Subcom of T&D), American Electric Power, bmehraban@aep.com

Phil Overholt, US Department of Energy, Philip.Overholt@hq.doe.gov

Konrad Weeber, GE Global Research, weeber@research.ge.com

Tony Weekes, Manitoba Hydro, maweekes@hydro.mb.ca