Arnold Schwarzenegger
Governor

CERTS MICROGRID LABORATORY TEST BED

Test Bed Design Schematics

APPENDIX A

Prepared For:
California Energy Commission
Public Interest Energy Research Program

Prepared By:
Lawrence Berkeley National Laboratory

CERTS
CONSORTIUM FOR ELECTRIC RELIABILITY TECHNOLOGY SOLUTIONS

Prepared By:
Lawrence Berkeley National Laboratory
Joseph H. Eto, Principal Investigator
Berkeley, CA 94720
Ed Linton, Northern Power Systems
Commission Contract No. 500-03-024
LBNL-802E

Prepared For:
Public Interest Energy Research (PIER)
California Energy Commission

Bernard Treanton
Contract Manager

Mike Gravely
Program Area Lead
ENERGY SYSTEMS INTEGRATION

Mike Gravely
Office Manager
ENERGY SYSTEMS RESEARCH

Martha Krebs, Ph.D.
PIER Director

Thom Kelly, Ph.D.
Deputy Director
ENERGY RESEARCH & DEVELOPMENT DIVISION

Melissa Jones
Executive Director

DISCLAIMER

This report was prepared as the result of work sponsored by the California Energy Commission. It does not necessarily represent the views of the Energy Commission, its employees or the State of California. The Energy Commission, the State of California, its employees, contractors and subcontractors make no warrant, express or implied, and assume no legal liability for the information in this report; nor does any party represent that the uses of this information will not infringe upon privately owned rights. This report has not been approved or disapproved by the California Energy Commission nor has the California Energy Commission passed upon the accuracy or adequacy of the information in this report.

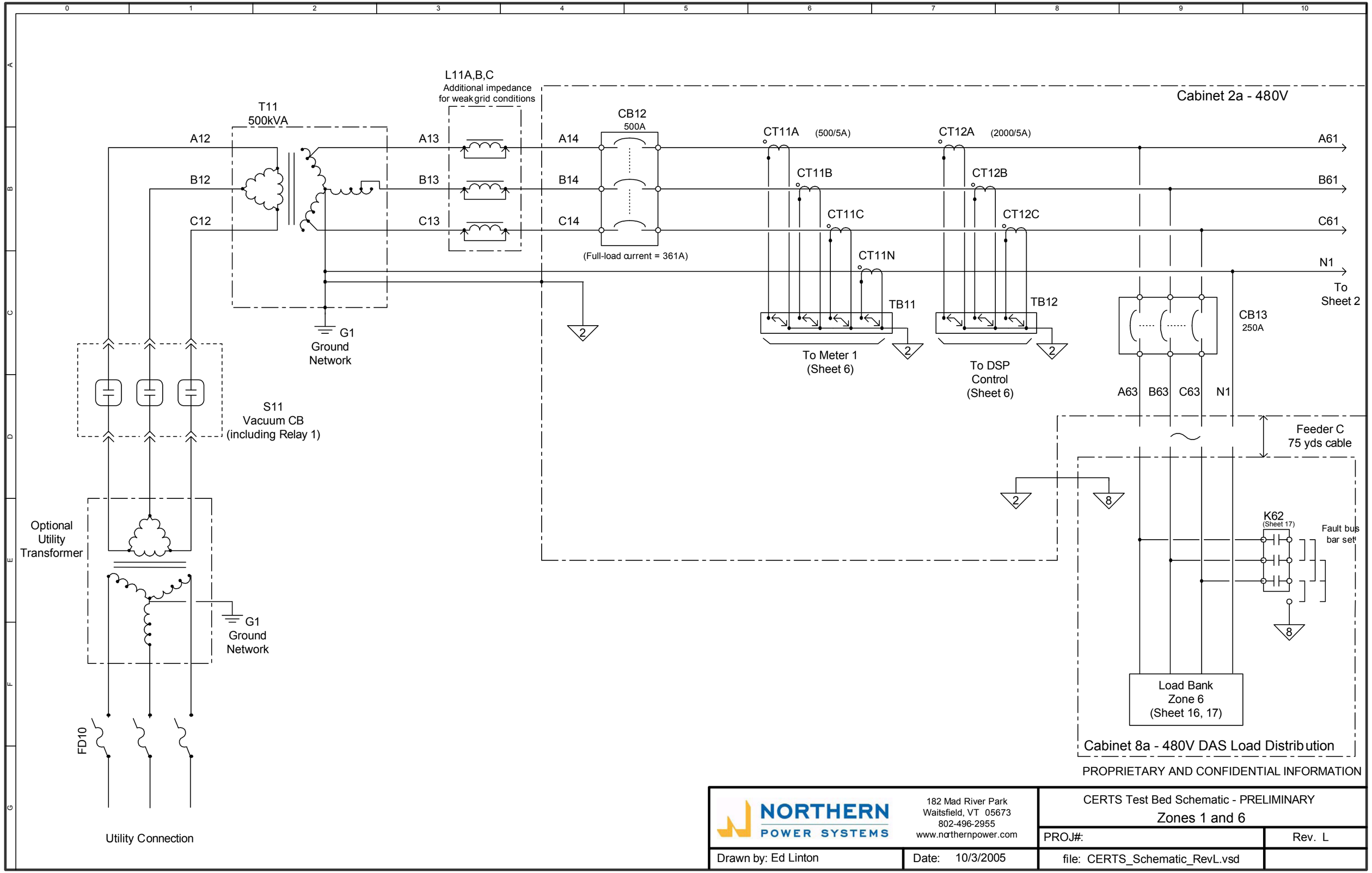

Figure 1: CERTS Test Bed Schematic - Preliminary - Zones 1 and 6

Cabinet 2b & 2c - Static Switch - 480V

Cabinet 2a - 480V

Cabinet 2d - 480V

From Sheet 1

A61 CT13A (400/5A)

B61 CT13B

C61 CT13C

N1 CT13N

CT14A (1500/5A) CT14R

CT14B

CT14C

TB13

TB14

To Meter 2 (Sheet 6)

To Relay 2 and DSP Control (Sheet 6)

F13H-A,B,C (2A)

To Meter 1 and Meter 2 (Sheet 6)

F14H-A,B,C (2A)

PT14A, B, C 277/120V

F14X-A,B,C (1.6A)

To Relay 2 and DSP Control (Sheet 6)

CB17

CB14

CB16

Static Switch SS15 Thyristor Assembly

(Full-load current = 271A)

A62

B62

C62

N1

A22

B22

C22

N1

Fault bus bar set

K22 (Sheet 18)

To Sheet 3

F17H-A,B,C (2A)

PT17A, B, C 277/120V

F17X-A,B,C (1.6A)

To DSP Control (Sheet 6)

Cabinet 2e

Voltage Relay 5a

Va

Vb

Vc

com

F51H-A,B,C (2A)

CB51 250A

A51 B51 C51

To Sheet 5

PROPRIETARY AND CONFIDENTIAL INFORMATION

NORTHERN POWER SYSTEMS
182 Mad River Park
Waitsfield, VT 05673
802-496-2955
www.northernpower.com

CERTS Test Bed Schematic - PRELIMINARY

Zone 6 and 2

PROJ#:

Rev. L

Drawn by: Ed Linton

Date: 10/3/2005

file: CERTS_Schematic_RevL.vsd

Figure 2: CERTS Test Bed Schematic - Preliminary - Zones 6 and 2

Cabinet 2d - 480V

From Sheet 2

CB31
250A

A22 A31
B22 B31
C22 C31
N1

CT32A (250/5A) CT32R
CT32B
CT32C

CT34A (300A)
CT34B
CT34C

CT35A (250/5A)
CT35B
CT35C
CT35N

F35H-A,B,C
(2A)

To Meter 3 and Meter A1 (Sheet 8) and Microsource A1 Controller

TB32

To Microsource A1 Controller

TB35

To Meter 3 (Sheet 8)

F32H-A,B,C
(2A)

PT32A, B, C
277/120V

F32X-A,B,C
(1.6A)

Va
Vb
Vc
com
Vs
Vsn

Relay 3
(also Sheet 10)

DAS_24dcCOM
DAS_24dcPOS

+
PWR
-
G

Ia (5A)
Ib
Ic
In

Cabinet 2e

75 yds cable

Cabinet 3a - 480V DAS Load Distribution

25 yds cable

A31
B31
To Sheet 4
C31
N1

Load Bank Zone 3 (Sheet 7, 8)

K32
(Sheet 8)

Fault bus bar set

G1

TB33

CT33N
(150/5A)
CT33C
CT33B
CT33A

To Meter A1 (Sheet 8)

A31 B31 C31 N1

to CB32, and Microsource A1

PROPRIETARY AND CONFIDENTIAL INFORMATION

NORTHERN POWER SYSTEMS
182 Mad River Park
Waitsfield, VT 05673
802-496-2955
www.northernpower.com

CERTS Test Bed Schematic - PRELIMINARY
Zone 3

PROJ#:

Rev. L

Drawn by: Ed Linton

Date: 10/3/2005

file: CERTS_Schematic_RevL.vsd

Figure 3: CERTS Test Bed Schematic - Preliminary - Zone 3

Cabinet 4a - 480V

Cabinet 5a - 480V DAS Load Distribution

From Zone 3 Sheet 3

CB41 250A

A31 A41

B31 B41

C31 C41

N1

(Full-load current = 90A)

CT42A (150/5A) CT42R

CT42B

CT42C

CT44A (200A)

CT44B

CT44C

CT45A (150/5A)

CT45B

CT45C

CT45N

75 yard cable

TB42

TB45

To Microsource A2 Controller

To Meter 4 (Sheet 13)

G1

Load Bank Zone 4 (Sheet 12, 13)

K42 (Sheet 13)

Fault bus bar set

To Meter 4 and Meter A2 (Sheet 13) and Microsource A2 Controller

F45H-A,B,C (2A)

F42H-A,B,C (2A)

PT42A, B, C 277/120V

F42X-A,B,C (1.6A)

TB43

CT43N (150/5A)

CT43C

CT43B

CT43A

To Meter A2 (Sheet 13)

A41 B41 C41 N1

to CB42 and Microsource A2

Va

Vb

Vc

com

Vs

Vsn

Ia (5A)

Ib

Ic

In

Relay 4 (also Sheet 10)

+ PWR -

G

DAS_24dcCOM

DAS_24dcPOS

PROPRIETARY AND CONFIDENTIAL INFORMATION

NORTHERN POWER SYSTEMS
182 Mad River Park
Waitsfield, VT 05673
802-496-2955
www.northernpower.com

CERTS Test Bed Schematic - PRELIMINARY
Zone 4

PROJ#:

Rev. L

Drawn by: Ed Linton

Date: 10/3/2005

file: CERTS_Schematic_RevL.vsd

Figure 4: CERTS Test Bed Schematic - Preliminary - Zone 4

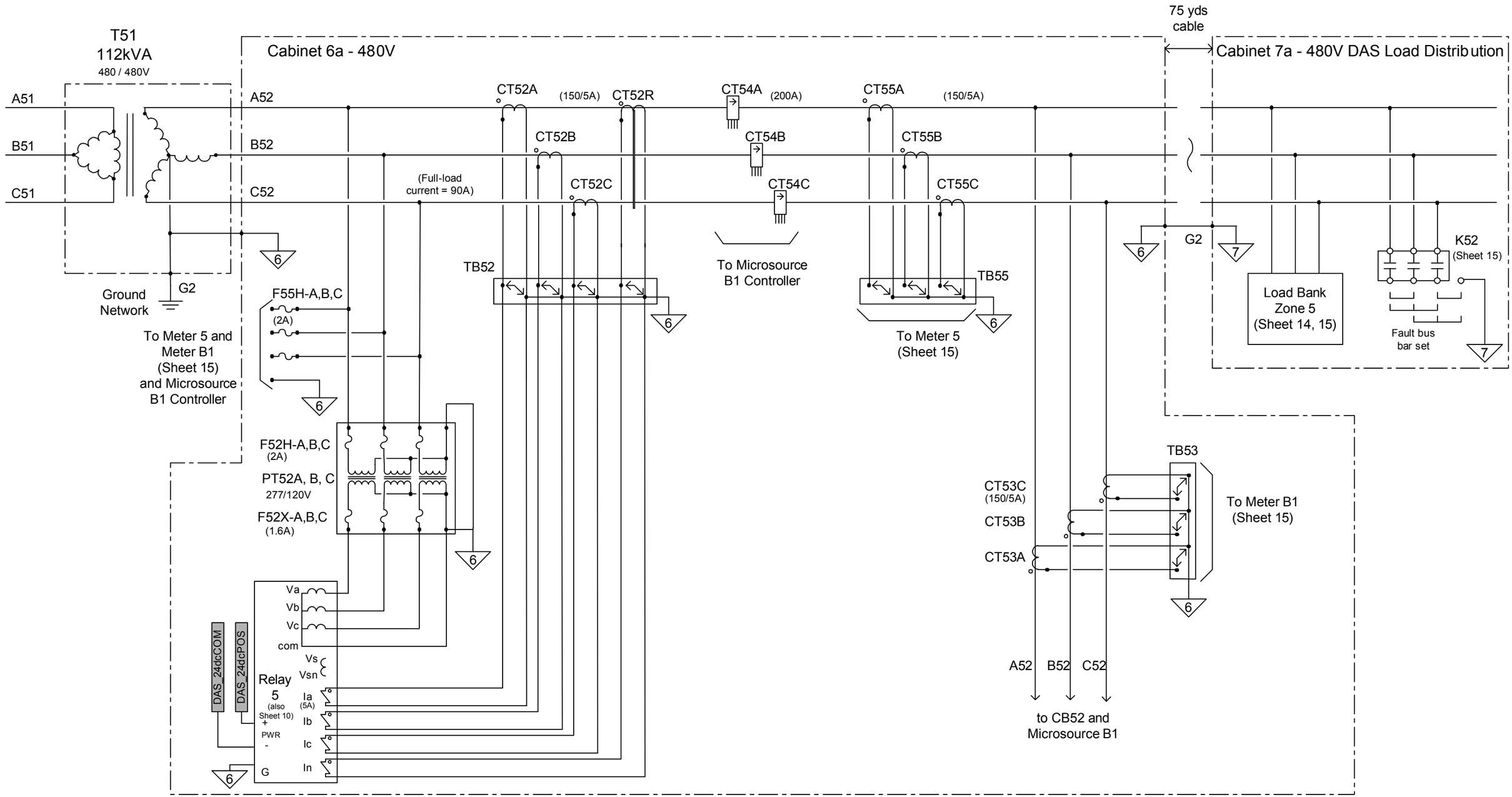

PROPRIETARY AND CONFIDENTIAL INFORMATION

NORTHERN POWER SYSTEMS	182 Mad River Park Waitsfield, VT 05673 802-496-2955 www.northernpower.com	CERTS Test Bed Schematic - PRELIMINARY Zone 5
		PROJ#: — Rev. L
Drawn by: Ed Linton	Date: 10/3/2005	file: CERTS_Schematic_RevL.vsd

Figure 5: CERTS Test Bed Schematic - Preliminary - Zone 5

Cabinet 2a -
480V

Va
Vb
Vc
com
To
PT17

DSP
Control
Ia
(1A)
Ib
Ic
To CT12

DAS_24dcCOM
DAS_24dcPOS
+
PWR
-
G
2

Ia
(1A)
Ib
Ic
To CT14

Va
Vb
Vc
com
To
PT14

To CT14R

Relay 2
(also Sheet 10)
Vs
Vsn
In

Cabinet 2e -
LV SS Control

V1
V2
V3
Vref
V4
(Va)
(Vb)
(Vc)
(Vn)
(Vg)
To
F13H

DAS_120acBLK
DAS_120acWHT
L/+
N/-
G
Meter 1
(See also
Sheet 19)
I1
(5A)
I2
I3
I4
To CT11

Meter 2
(See also
Sheet 19)
To CT13

PROPRIETARY AND CONFIDENTIAL INFORMATION

NORTHERN POWER SYSTEMS
182 Mad River Park
Waitsfield, VT 05673
802-496-2955
www.northernpower.com

CERTS Test Bed Schematic - PRELIMINARY
Zone 2 Controls

PROJ#:
Rev. L

Drawn by: Ed Linton
Date: 10/3/2005
file: CERTS_Schematic_RevL.vsd

Figure 6: CERTS Test Bed Schematic - Preliminary - Zone 2 Controls

Cabinet 3a - 480V DAS Load Distribution

From Sheet 3

CB33 250A

A31 A32 B31 B32 C31 C32 N1

CT36A (200/5A) CT36B CT36C CT36N

J31 1 2 3 4

To Sheet 8

A32 B32 C32 N1

F36H-A,B,C (2A)

TB36

CB38 15A

CB34 30A

CB35 150A

MS34

Load3_120acBLK

K38 (Cabinet 3c)

MS 34

Load3_120acWHT

T38 480 / 120V

F38X

DC Power Supply PS38

R38

M34

SR31

Motor Load 10 to 20 HP see specification

Torque sensor

Cabinet 3b - LV DAS Load Control

Load Meter 3 (See also Sheet 20)

V1 V2 V3 Vref V4

I1 (5A) I2 I3 I4

L/+ N/- G

Load3_120acWHT Load3_120acBLK

Cabinet 3b

load bit 1 (lsb) load bit 6 (msb)

DO-1 DO-2 DO-3 DO-16 DO-17 DO-18 DO-19 DO-20 DO-24 DO-25

TB37 TB37

K36-1a K36-1b K36-1c K36-6a K36-6b K36-6c

K38 K37-1 K37-3

Load control SSR's K36-1a through K36-6c

Zone 3 Load Control PLC

(Sheet 8)

Load3_24dcPOS Load3_24dcCOM

to DAS Trigger Circuit (Sheet 19)

(See also sheet 8)

AI-1 DC power supply monitor

AI-2 Motor torque sensor

Cabinet 3b - 480V DAS Load Control

CB36-1 CB36-1 through CB36-6 CB36-6

K36-1a,b,c K36-1a,b,c through K36-6a,b,c K36-6a,b,c

R36-1 5kW Load resistor array R36-1 through R36-6 R36-6 20kW

5kW, 10kW, 4 x 20kW 3-phase resistors

PROPRIETARY AND CONFIDENTIAL INFORMATION

NORTHERN POWER SYSTEMS
182 Mad River Park
Waitsfield, VT 05673
802-496-2955
www.northernpower.com

CERTS Test Bed Schematic - PRELIMINARY
Load Bank 3

PROJ#: Rev. L

Drawn by: Ed Linton Date: 10/3/2005 file: CERTS_Schematic_RevL.vsd

Figure 7: CERTS Test Bed Schematic - Preliminary - Load Bank 3

Cabinet 3a - 480V DAS Load Distribution

From Sheet 7

A32
B32
C32
N1

CB39
100A

K39-1
L39-1A,B,C
10 kVAR
61.1 mH, 24A

K39-3
L39-3A,B,C
30 kVAR
20.4 mH, 72A

K39-2a,b,c
L39-2A,B,C
20 kVAR
30.5 mH, 48A

Cabinet 2e - LV

Meter 3
(See also Sheet 19)
V1, V2, V3, Vref, V4
(Va), (Vb), (Vc), (Vn), (Vg)
To F35H (Sheet 3)
I1 (5A), I2, I3, I4
To TB35 (Sheet 3)
L/+
N/-
G
2

Meter A1
(See also Sheet 19)
V1, V2, V3, Vref, V4
I1 (5A), I2, I3, I4
To TB33 (Sheet 3)
L/+
N/-
G
2

Load3_120acBLK
Load3_120acWHT

Load3_120acBLK
K37-1, K37-2a, K37-2b, K37-2c, K37-3
K39-1, K39-2a, K39-2b, K39-2c, K39-3
Load3_120acWHT
(K37-x in Cabinet 3c)

Cabinet 3b - LV DAS Load Control

Load3_24dcPOS
Fault 3 Local Arming Key Switch
S31
DAQ Fault 3 Arm
K33-1
K33-2
DAQ Fault 3 Apply
K33-3
Fault Switch (Cabinet 3a, Sheet 3)
c11, c12
c1, c2
LT31 "Fault 3 Locally Armed"
LT32 "Fault 3 Remotely Armed"
LT33 Fault 3 Warning Strobe Light
K32 YO (open)
K34
K32 YC (close)
Trigger circuit (Sheet 19)
Load3_24dcCOM

Zone 3 Load Control PLC
(See also sheet 7)
Load3_24dcPOS
Load3_24dcCOM
DO-26, DO-27, DO-28, DO-29, DO-30
K33-1, K33-2, K33-3
J32
1, 2, 3, 4, 5, 6
-Pwr+
G
3
Load3_120acBLK
u1
Fault Switch Spring Motor
K32 M
u2
Load3_120acWHT

PROPRIETARY AND CONFIDENTIAL INFORMATION

NORTHERN POWER SYSTEMS
182 Mad River Park
Waitsfield, VT 05673
802-496-2955
www.northernpower.com

CERTS Test Bed Schematic - PRELIMINARY
Load Bank 3 continued

PROJ#:
Rev. L

Drawn by: Ed Linton
Date: 10/3/2005
file: CERTS_Schematic_RevL.vsd

Figure 8: CERTS Test Bed Schematic - Preliminary - Load Bank 3 Continued

Isolated, secure 20 kVA, source that will not be effected by testing, use UPS if necessary, voltage TBD.

120V

T91
15kVA

G3

CB1
15A

CB10
100A

CB2
15A

CB3
15A

CB4
15A

CB5
15A

CB6
15A

CB9
15A

DAS Power Supply
Cabinet 2e

DAS_120acBLK
DAS_120acWHT
Duplex Outlet U2a
PS1
FD1
DAS_24dcPOS
DAS_24dcCOM
2
Distributed to Cabinets 2a, 2e, 4a & 6a

CB Power Supply
Cabinet 2a

CB_120acBLK
CB_120acWHT
Duplex Outlet U2e
PS2
FD2
CB_24dcPOS
CB_24dcCOM
2
Distributed to Cabinets 2a, 2d, 4a & 6a

Load 3 Control Power
Cabinet 3b

Load3_120acBLK
Load3_120acWHT
Duplex Outlet U3b
PS3
FD3
Load3_24dcPOS
Load3_24dcCOM
3
Distributed to Cabinets 3a, 3b

Load 4 Control Power
Cabinet 5b

Load4_120acBLK
Load4_120acWHT
Duplex Outlet U5b
PS4
FD4
Load4_24dcPOS
Load4_24dcCOM
5
Distributed to Cabinets 5a, 5b

Load 5 Control Power
Cabinet 7b

Load5_120acBLK
Load5_120acWHT
Duplex Outlet U7b
PS5
FD5
Load5_24dcPOS
Load5_24dcCOM
7
Distributed to Cabinets 7a, 7b

Load 6 Control Power
Cabinet 8b

Load6_120acBLK
Load6_120acWHT
Duplex Outlet U8b
PS6
FD6
Load6_24dcPOS
Load6_24dcCOM
8
Distributed to Cabinets 8a, 8b

EMS & DAS
Workstation 9b

PC_120acBLK
PC_120acWHT
Duplex Outlet U9b

Cabinet 9a -
120V DAS Power
Distribution

PROPRIETARY AND CONFIDENTIAL INFORMATION

NORTHERN POWER SYSTEMS
182 Mad River Park
Waitsfield, VT 05673
802-496-2955
www.northernpower.com

CERTS Test Bed Schematic - PRELIMINARY
Control Power

PROJ#:

Rev. L

Drawn by: Ed Linton

Date: 10/3/2005

file: CERTS_Schematic_RevL.vsd

Figure 9: CERTS Test Bed Schematic - Preliminary - Control Power

Cabinet 2a | Cabinet 2e | Load Cabinets | Cabinet 4a | Cabinet 6a | Microsources | DAS & EMS Computers

Relay 3
RS-232
FO202
Relay 2
RS-232
FO203
RS-232
SEL-2030
FO207
RS-232
FO401
RS-232
Relay 4
FO601
RS-232
Relay 5
RS-232
RS-232
FO206
RS-232
RS-232
FO204
FO205

FO201
SS DSP Control
RS-485

Meter 1
Ethernet
Meter 2
Meter 3
Meter 4
Meter 5
Meter A1
Meter A2
Meter B1

Ethernet Hub
EIR 308 -2ST
EIR 305 -1ST
EIR 308 -2ST
EIR 308 -2ST
Load Meter 3
Load Meter 4
Load Meter 5
Load Meter 6

Ethernet Hub
Load PLC 2
ECOM
EIR 308 -2ST
EIR 305 -1ST
EIR 308 -2ST
ECOM -F
Load PLC 3
ECOM -F
Load PLC 4
ECOM -F
Load PLC 5
ECOM -F
Load PLC 6

FO101
RS-485
Microsource A1
RS-485
Microsource A2
Microsource B1

FO901
RS-485
FO902
RS-232
FO903
RS-485
EMS Computer

FO904
RS-232
DAS Computer
EIR 308 -2ST

Ledgend:
- RS-232 — SEL-2812 fiber optic converter
- RS-485 — B&B FOSTCDR fiber optic converter
- Fiber Optic Cable Pairs, multimode with ST connectors

PROPRIETARY AND CONFIDENTIAL INFORMATION

NORTHERN POWER SYSTEMS
182 Mad River Park
Waitsfield, VT 05673
802-496-2955
www.northernpower.com

CERTS Test Bed Schematic - PRELIMINARY
DAS & EMS Communications

PROJ#: | Rev. L

Drawn by: Ed Linton | Date: 10/3/2005 | file: CERTS_Schematic_RevL.vsd

Figure 10: CERTS Test Bed Schematic - Preliminary - DAS & EMS Communications

Feeder A

Cabinet 2

2d

2e Low Voltage

CB31

CT32R

3

N

G1

75 yards

Cabinet 3

3a

25 yards

Cabinet 4a

CB41

CT42R

3

N

G1

75 yards

Cabinet 5

5a

CB33

Fault Load

CB43

Fault Load

CB32

CB34, CB35, CB39

3b

CB42

CB45, CB48, CB49

5b

3

N

G1

CB51

Load Elements Zone 3

Load Elements Zone 4

Battery

Microsource A1

Battery

Microsource A2

Fault Load

Feeder B

T51

Cabinet 6a

75 yards

Cabinet 7

7a

3

CT52R

3

G2

G2

CB53

Fault Load

CB52

CB55, CB57, CB59

7b

Load Elements Zone 5

Battery

Microsource B1

DAS and EMS Control Power

Cabinet 9a

120V

Reliable control power source

Zone power supplies

G3

S&C

CB16

Static Switch SS15

CB17

CB14

CT14R

CB13

Feeder C (75 yards)

Cabinet 8

8a

3

N

G1

2a

CB12

CB63

Fault Load

CB65, CB69

8b

T11

G1

Load Elements Zone 6

Optional Transformer

S11

FD10

Utility

PROPRIETARY AND CONFIDENTIAL INFORMATION

NORTHERN POWER SYSTEMS
182 Mad River Park
Waitsfield, VT 05673
802-496-2955
www.northernpower.com

CERTS Test Bed Schematic - PRELIMINARY

Ground & Neutral Treatment

PROJ#:

Rev. L

Drawn by: Ed Linton

Date: 10/3/2005

file: CERTS_Schematic_RevL.vsd

Figure 11: CERTS Test Bed Schematic - Preliminary - Ground & Neutral Treatment

Cabinet 5a - 480V DAS Load Distribution

From Sheet 4

A41 A42 B41 B42 C41 C42 N1

CB43 250A

CT46A (200/5A) CT46B CT46C CT46N

J41

To Sheet 13

A42 B42 C42 N1

F46H-A,B,C (2A)

TB46

CB48 15A

CB45 150A

Load Meter 4 (See also Sheet 20)

V1 V2 V3 Vref V4 I1 (5A) I2 I3 I4

L/+ N/- G

Load4_120acWHT Load4_120acWHT

T48 480 / 120V

F48X

DC Power Supply PS48

R48

Cabinet 5b

load bit 1 (lsb)

load bit 6 (msb)

DO-1 DO-2 DO-3 DO-16 DO-17 DO-18 DO-19 DO-23 DO-24

TB47 TB47

K46-1a K46-1b K46-1c K46-6a K46-6b K46-6c K47-1 K47-3

Load control SSR's K46-1a through K46-6c

Zone 4 Load Control PLC

(Sheet 13)

Load4_24dcPOS Load4_24dcCOM

to DAS Trigger Circuit (Sheet 19)

AI-1 DC power supply monitor

(See also sheet 13)

Cabinet 5b - LV DAS Load Control

Cabinet 5b - 480V DAS Load Control

CB46-1 CB46-1 through CB46-6 CB46-6

K46-1a,b,c K46-1a,b,c through K46-6a,b,c K46-6a,b,c

R46-1 5kW Load resistor array R46-1 through R46-6 R46-6 20kW

5kW, 10kW, 4 x 20kW 3-phase resistors

PROPRIETARY AND CONFIDENTIAL INFORMATION

NORTHERN POWER SYSTEMS
182 Mad River Park
Waitsfield, VT 05673
802-496-2955
www.northernpower.com

CERTS Test Bed Schematic - PRELIMINARY
Load Bank 4

PROJ#: Rev. L

Drawn by: Ed Linton Date: 10/3/2005 file: CERTS_Schematic_RevL.vsd

Figure 12: CERTS Test Bed Schematic - Preliminary - Load Bank 4

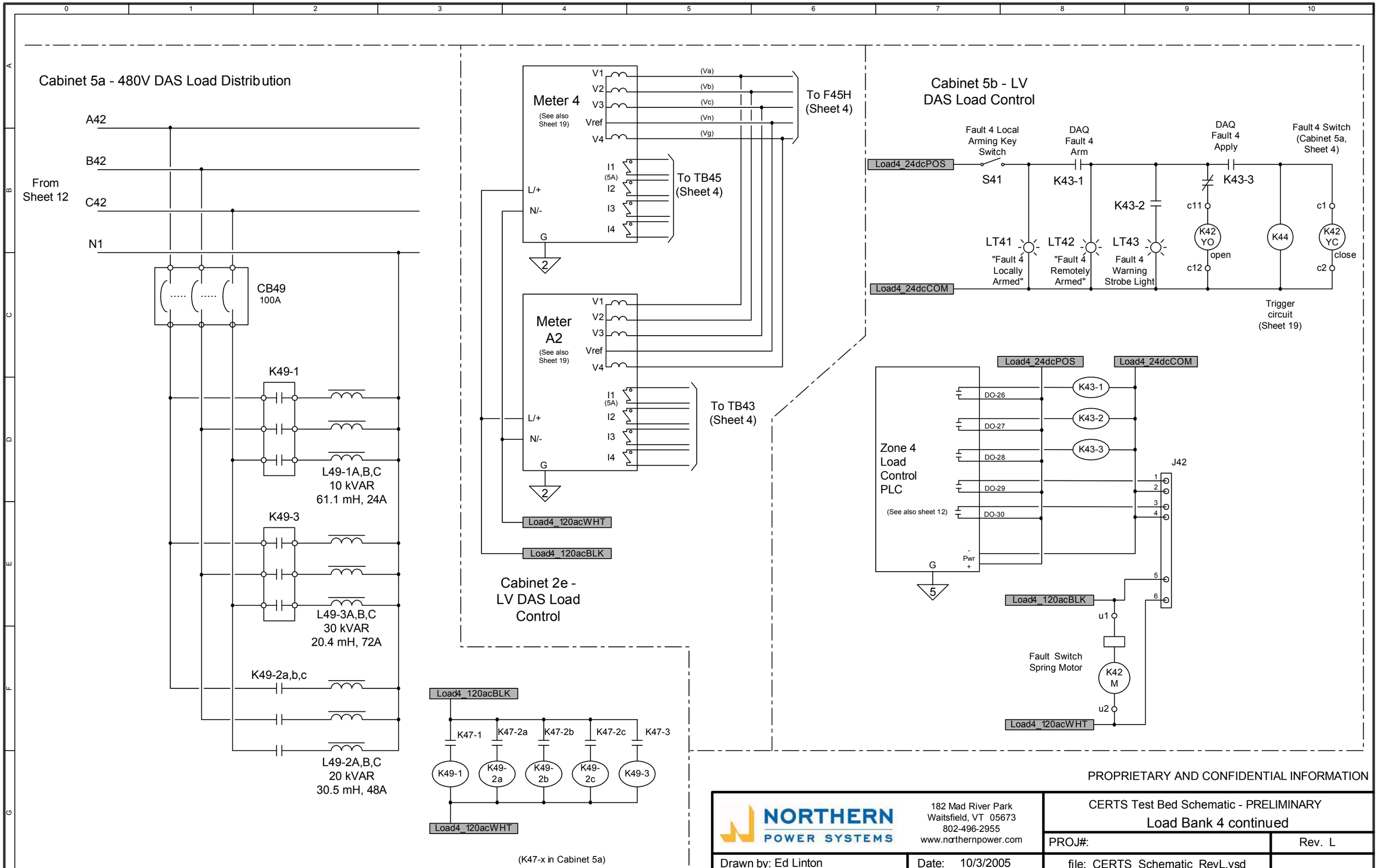

PROPRIETARY AND CONFIDENTIAL INFORMATION

NORTHERN POWER SYSTEMS	182 Mad River Park Waitsfield, VT 05673 802-496-2955 www.northernpower.com	CERTS Test Bed Schematic - PRELIMINARY Load Bank 4 continued
		PROJ#: Rev. L
Drawn by: Ed Linton	Date: 10/3/2005	file: CERTS_Schematic_RevL.vsd

Figure 13: CERTS Test Bed Schematic - Preliminary - Load Bank 4 Continued

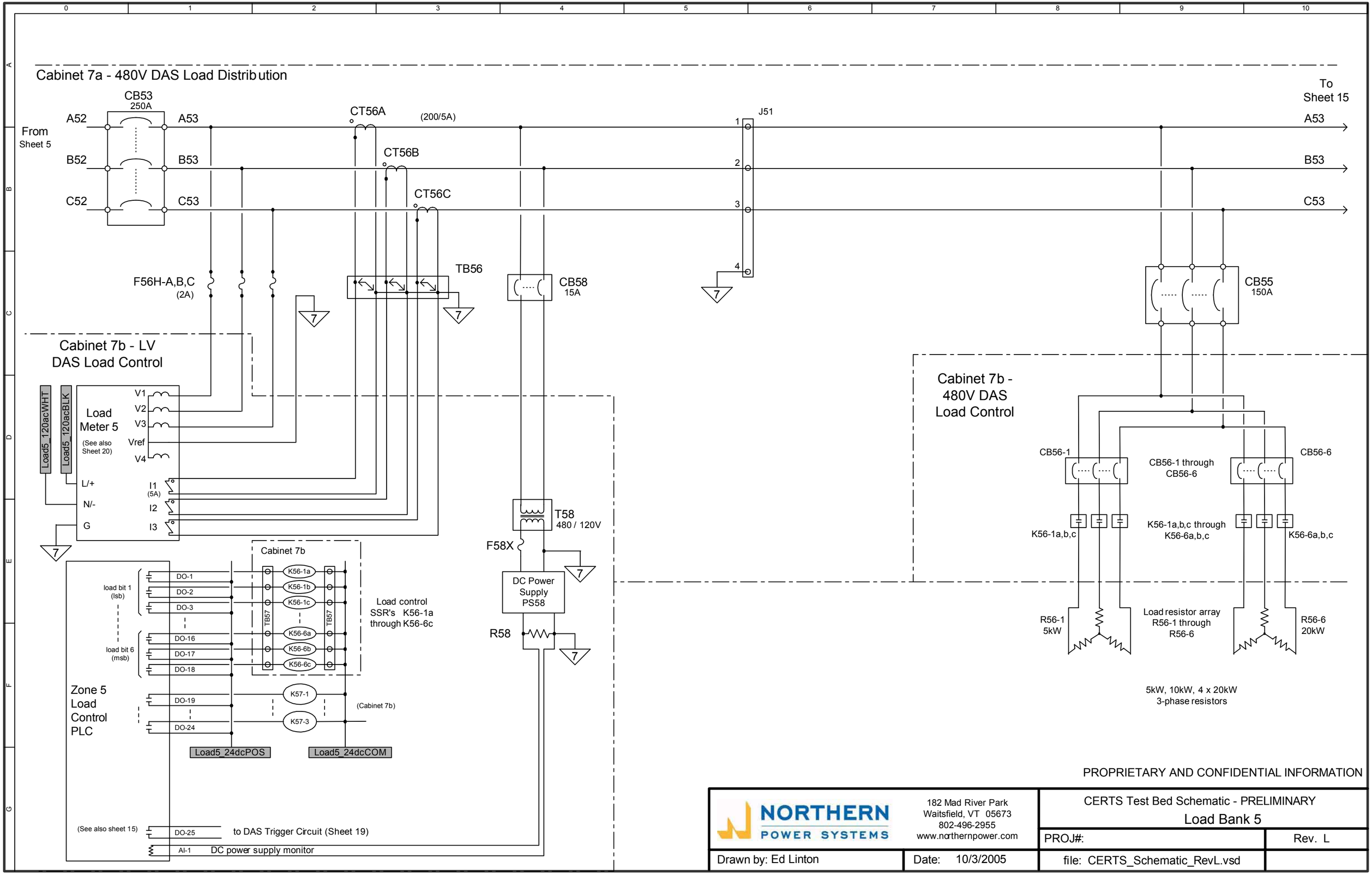

PROPRIETARY AND CONFIDENTIAL INFORMATION

NORTHERN POWER SYSTEMS
182 Mad River Park
Waitsfield, VT 05673
802-496-2955
www.northernpower.com

CERTS Test Bed Schematic - PRELIMINARY
Load Bank 5

PROJ#:

Rev. L

Drawn by: Ed Linton

Date: 10/3/2005

file: CERTS_Schematic_RevL.vsd

Figure 14: CERTS Test Bed Schematic - Preliminary - Load Bank 5

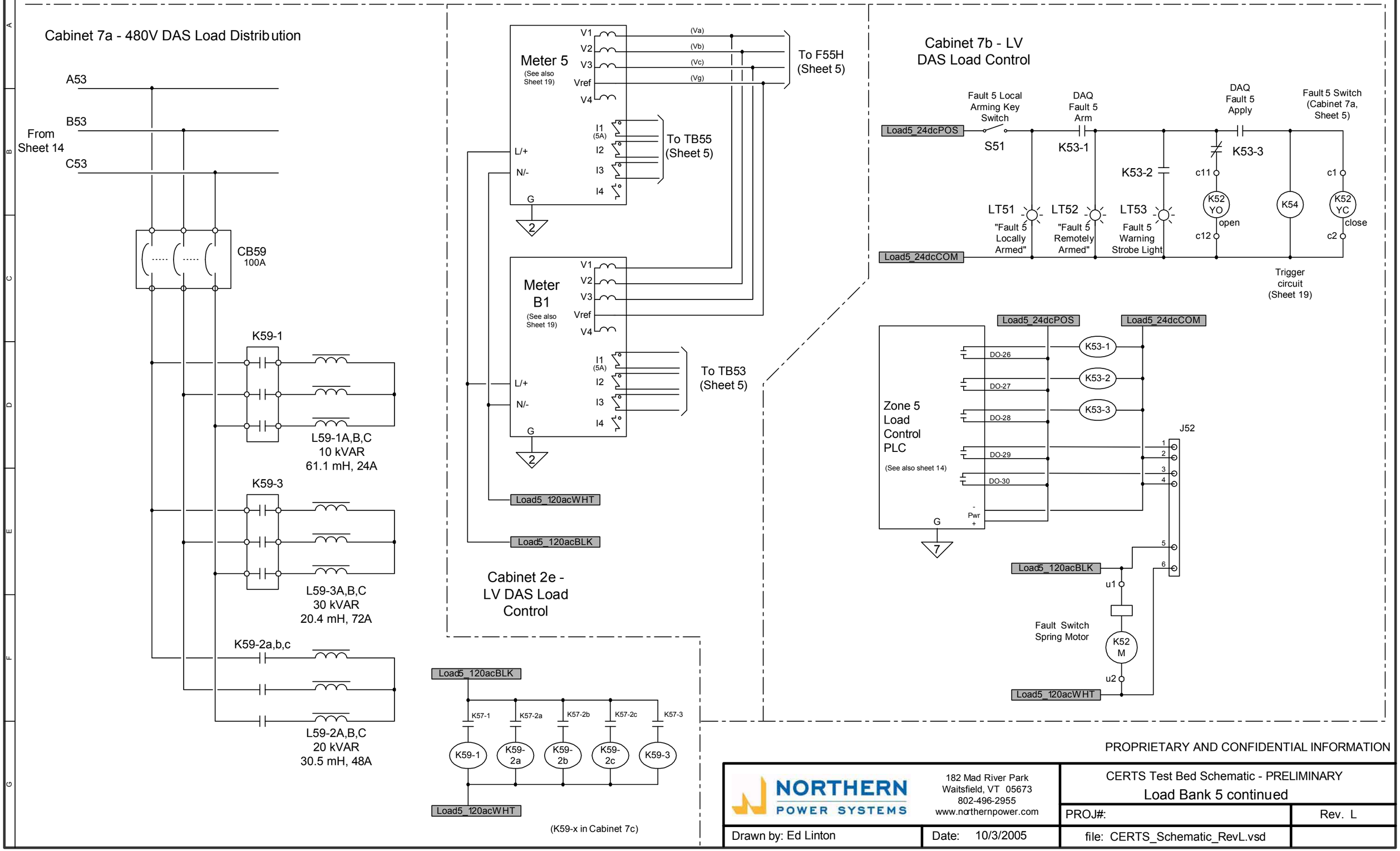

Figure 15: CERTS Test Bed Schematic - Preliminary - Load Bank 5 Continued

Cabinet 8a - 480V DAS Load Distribution

CB63
250A

From Sheet 1

A63 A64
B63 B64
C63 C64
N1

CT66A (200/5A)
CT66B
CT66C
CT66N

J61
1
2
3
4

To Sheet 17

A63
B63
C63
N1

F66H-A,B,C
(2A)

TB66

CB68
15A

CB65
150A

8

Cabinet 8b - LV DAS Load Control

Load Meter 6
(See also Sheet 20)

V1
V2
V3
Vref
V4
I1 (5A)
I2
I3
I4
L/+
N/-
G

Load6_120acWHT
Load6_120acBLK

T68
480 / 120V

F68X

DC Power Supply PS68

R68

Cabinet 8b

load bit 1 (lsb)
load bit 6 (msb)

DO-1
DO-2
DO-3
DO-16
DO-17
DO-18
DO-19
DO-24

TB67
TB67

K66-1a
K66-1b
K66-1c
K66-6a
K66-6b
K66-6c
K67-1
K67-3

Load control SSR's K66-1a through K66-6c

(Cabinet 8b)

Zone 6 Load Control PLC

Load6_24dcPOS
Load6_24dcCOM

DO-24 to DAS Trigger Circuit (Sheet 19)

AI-1 DC power supply monitor

(See also sheet 17)

Cabinet 8b - 480V DAS Load Control

CB66-1
CB66-1 through CB66-6
CB66-6

K66-1a,b,c
K66-1a,b,c through K66-6a,b,c
K66-6a,b,c

R66-1 5kW
Load resistor array R66-1 through R66-6
R66-6 20kW

5kW, 10kW, 4 x 20kW
3-phase resistors

PROPRIETARY AND CONFIDENTIAL INFORMATION

NORTHERN POWER SYSTEMS
182 Mad River Park
Waitsfield, VT 05673
802-496-2955
www.northernpower.com

CERTS Test Bed Schematic - PRELIMINARY
Load Bank 6

PROJ#:
Rev. L

Drawn by: Ed Linton
Date: 10/3/2005
file: CERTS_Schematic_RevL.vsd

Figure 16: CERTS Test Bed Schematic - Preliminary - Load Bank 6

Cabinet 8a - 480V DAS Load Distribution

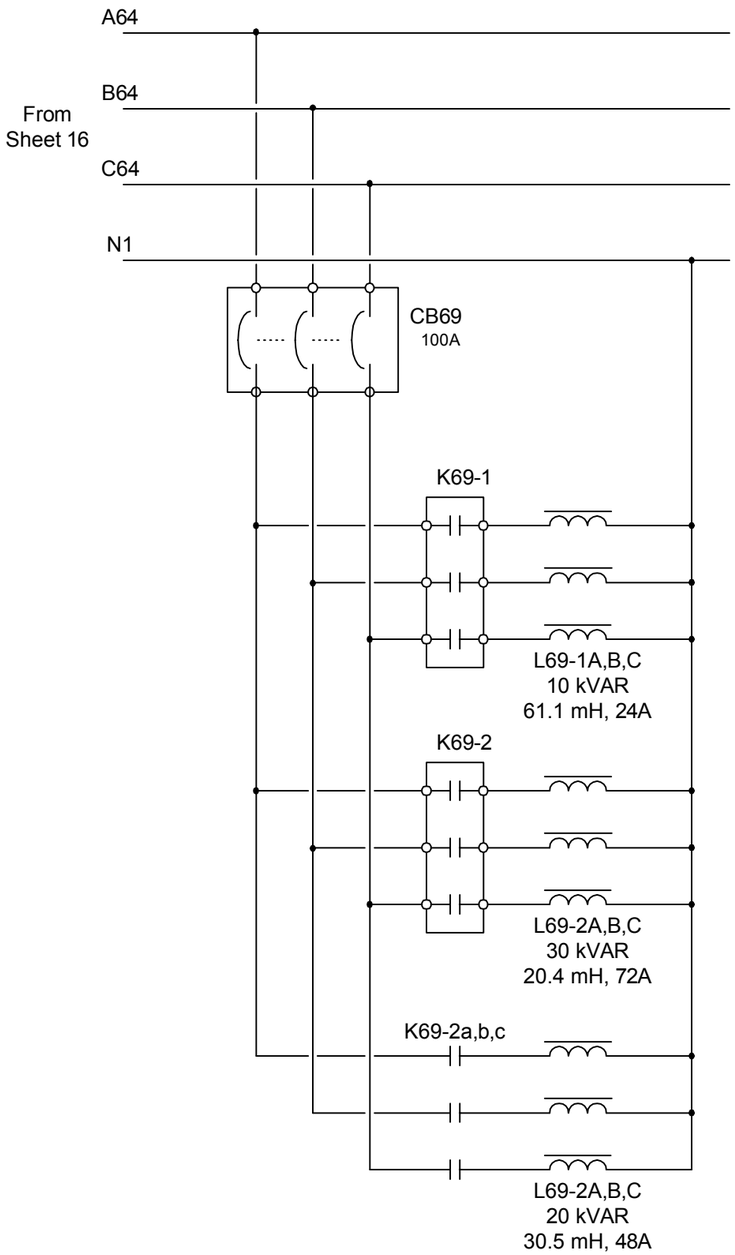

Cabinet 8b - LV DAS Load Control

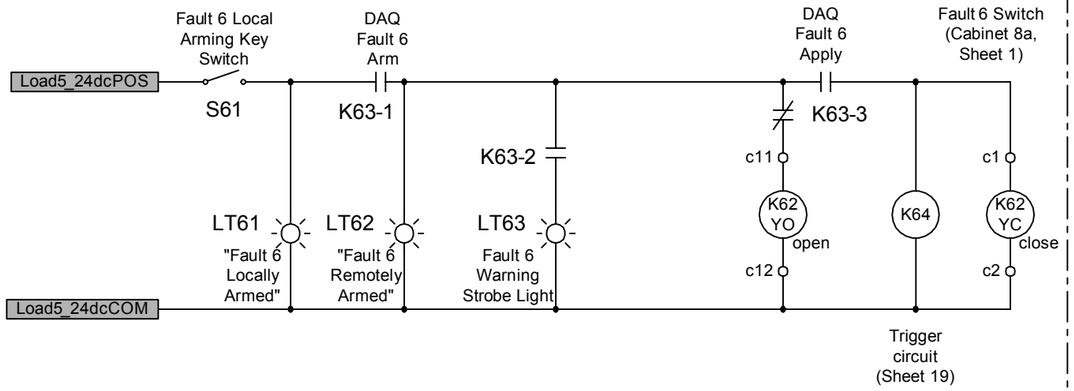

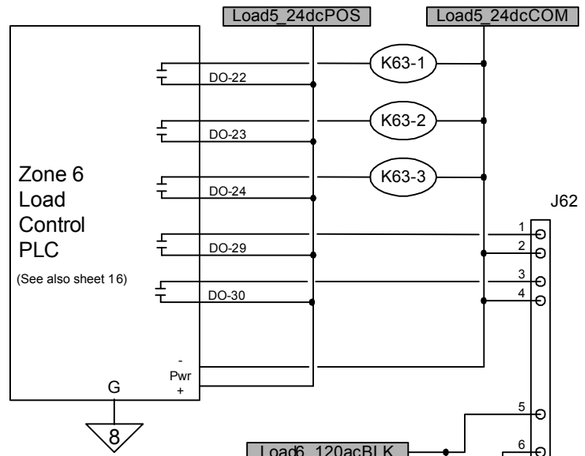

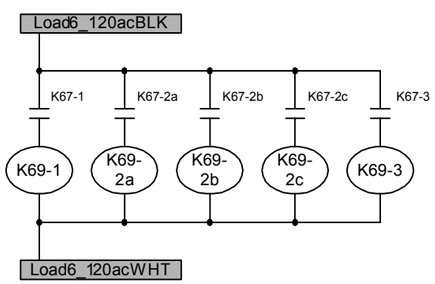

(K69-x in Cabinet 8c)

PROPRIETARY AND CONFIDENTIAL INFORMATION

NORTHERN POWER SYSTEMS 182 Mad River Park Waitsfield, VT 05673 802-496-2955 www.northernpower.com	CERTS Test Bed Schematic - PRELIMINARY Load Bank 6 continued	
	PROJ#:	Rev. L
Drawn by: Ed Linton	Date: 10/3/2005	file: CERTS_Schematic_RevL.vsd

Figure 17: CERTS Test Bed Schematic - Preliminary - Load Bank 6 Continued

Cabinet 10 - 480V

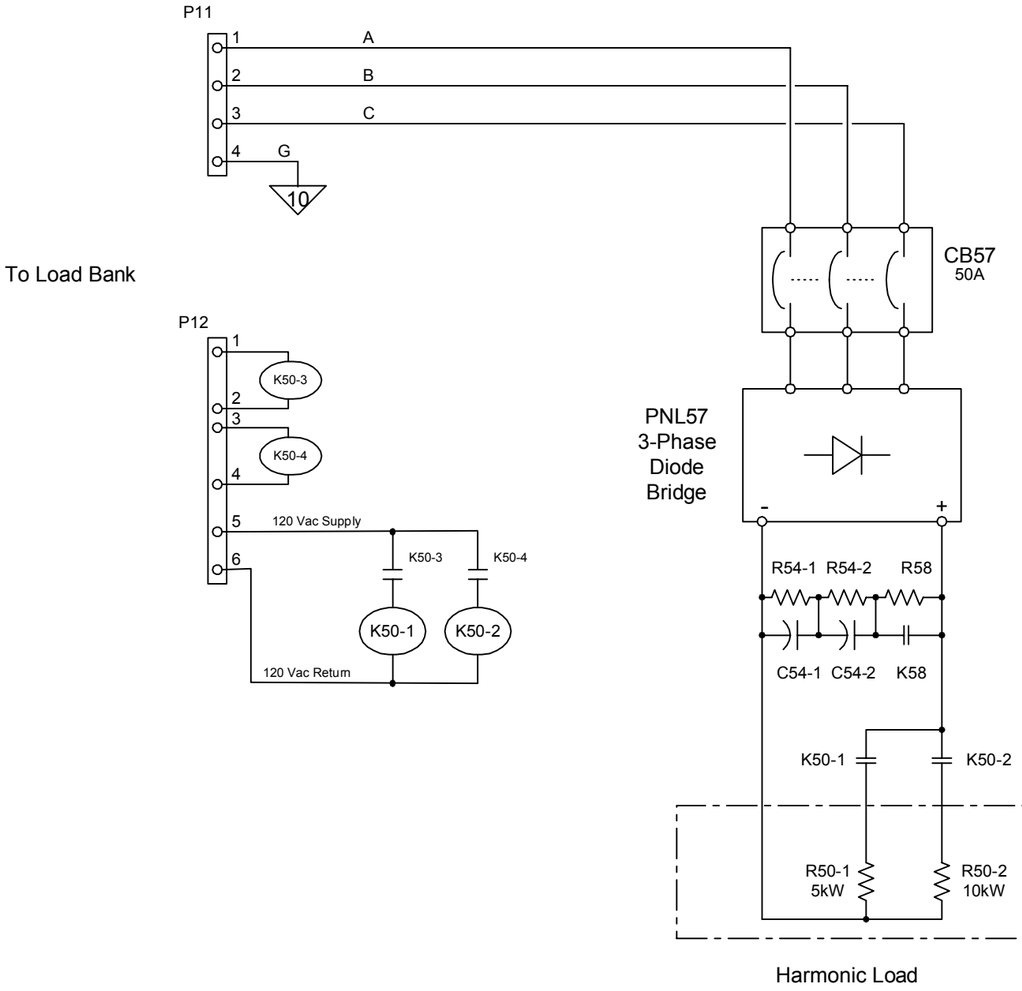

Typical Fault Bus Bar & Load Set

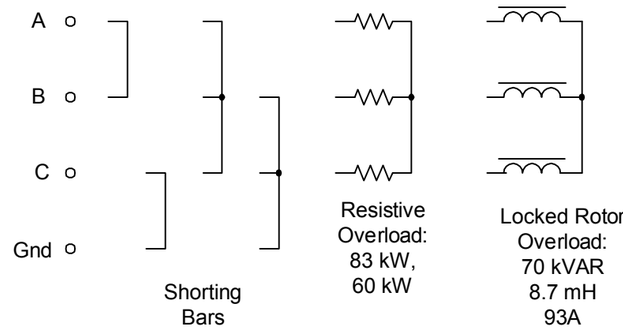

Cabinet 2e - LV DAS

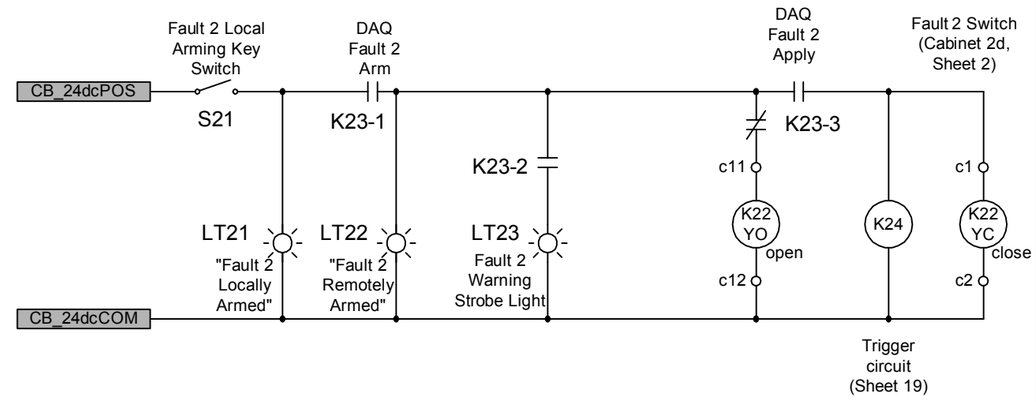

PROPRIETARY AND CONFIDENTIAL INFORMATION

NORTHERN POWER SYSTEMS	182 Mad River Park Waitsfield, VT 05673 802-496-2955 www.northernpower.com	CERTS Test Bed Schematic - PRELIMINARY Harmonic Load and Zone 2 Fault Control
Drawn by: Ed Linton	Date: 10/3/2005	PROJ#: / Rev. L file: CERTS_Schematic_RevL.vsd

Figure 18: CERTS Test Bed Schematic - Preliminary - Harmonic Load and Zone 2 Fault Control

DAS Trigger Pos

DAS Trigger Neg

SS15 Status b

CB31 Aux b

CB41 Aux b

CB51 Aux b

SCOM

Meter 1 Digital Input

Meter 2 Digital Input

Meter 3 Digital Input

Meter 4 Digital Input

Meter 5 Digital Input

S1

S8

Cabinet 2e

Meter A1 Digital Input

Meter B1 Digital Input

Meter A2 Digital Input

Relay 2 OUT102 (sheet 10)

K24

Load Cabinets

Load Meter 3 Digital Input

Load PLC 3 DO-24

K34

(Cabinet 3b, sheet 7, 8)

Load Meter 4 Digital Input

Load PLC 4 DO-24

K44

(Cabinet 5b, sheet 12, 13)

Load Meter 5 Digital Input

Load PLC 5 DO-24

K54

(Cabinet 7b, sheet 14, 15)

Load Meter 6 Digital Input

Load PLC 6 DO-24

K64

(Cabinet 8c, sheet 16, 17)

DAS PC

DAS digital output

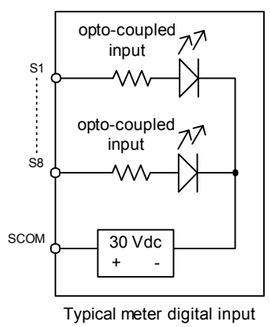

Typical meter digital input

PROPRIETARY AND CONFIDENTIAL INFORMATION

NORTHERN POWER SYSTEMS
182 Mad River Park
Waitsfield, VT 05673
802-496-2955
www.northernpower.com

CERTS Test Bed Schematic - PRELIMINARY
DAS Trigger Circuit

PROJ#:

Rev. L

Drawn by: Ed Linton

Date: 10/3/2005

file: CERTS_Schematic_RevL.vsd

Figure 19: CERTS Test Bed Schematic - Preliminary - DAS Trigger Circuit

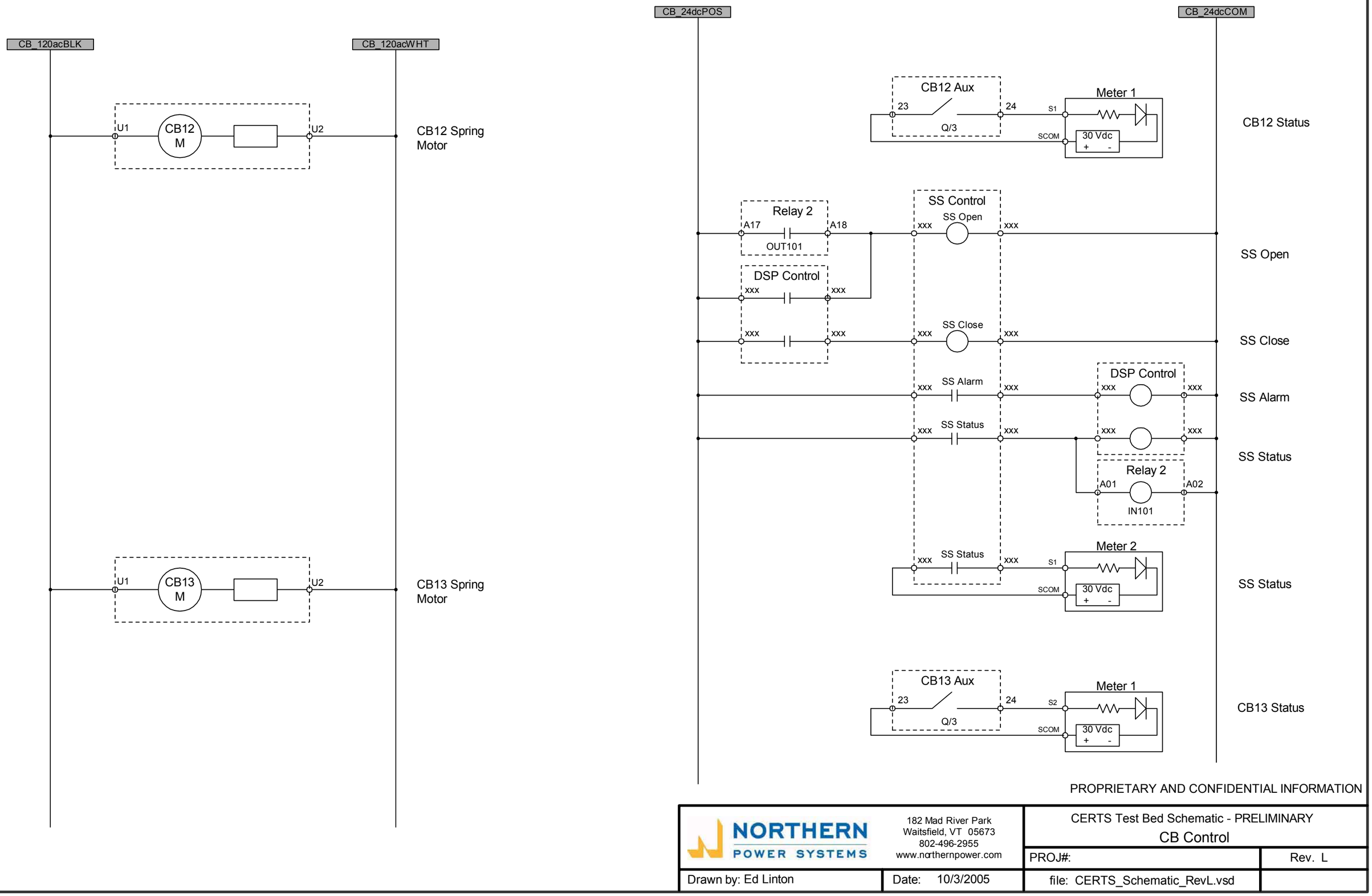

PROPRIETARY AND CONFIDENTIAL INFORMATION

NORTHERN POWER SYSTEMS
182 Mad River Park
Waitsfield, VT 05673
802-496-2955
www.northernpower.com

CERTS Test Bed Schematic - PRELIMINARY
CB Control

PROJ#:

Rev. L

Drawn by: Ed Linton

Date: 10/3/2005

file: CERTS_Schematic_RevL.vsd

Figure 20: CERTS Test Bed Schematic - Preliminary - CB Control

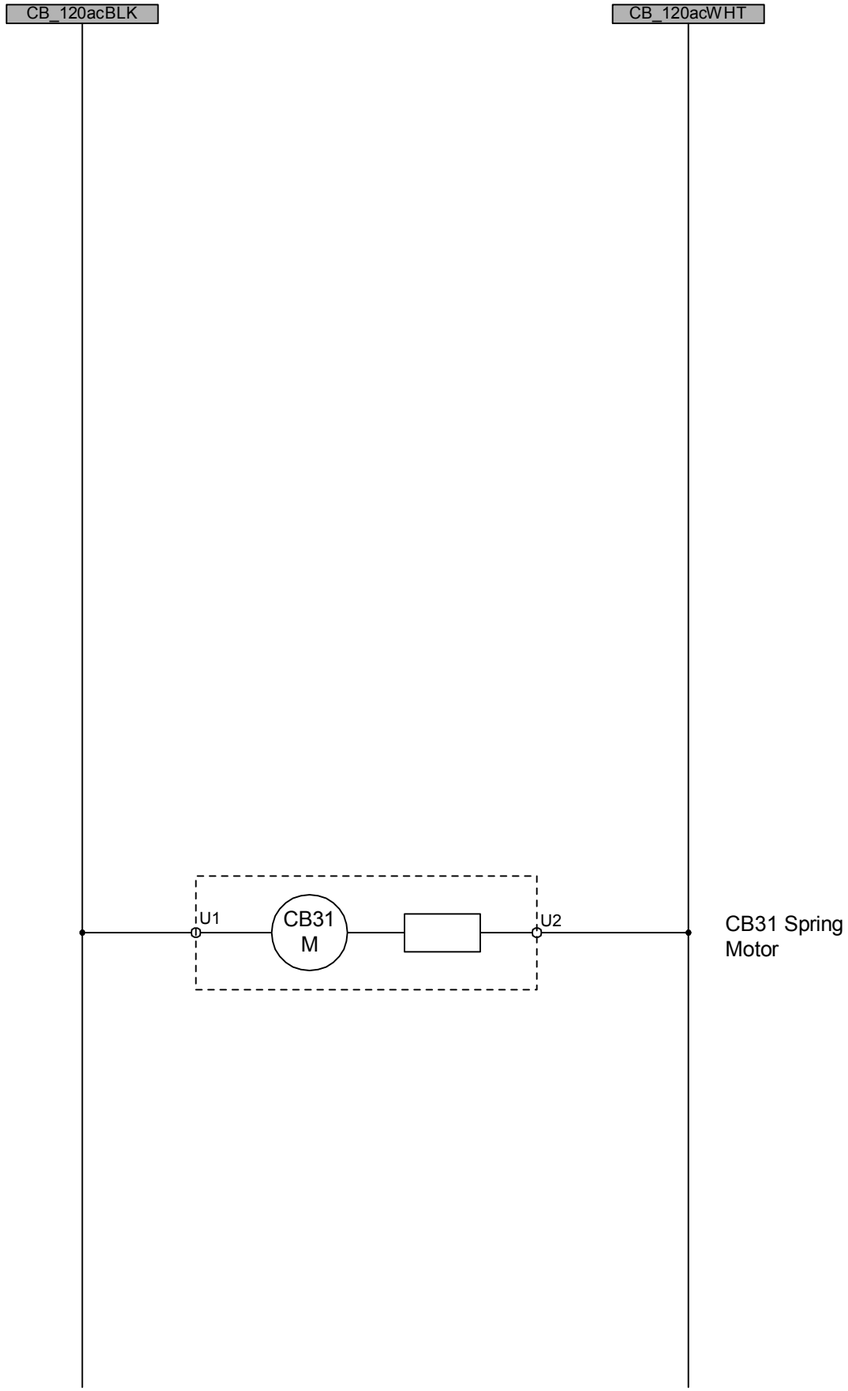

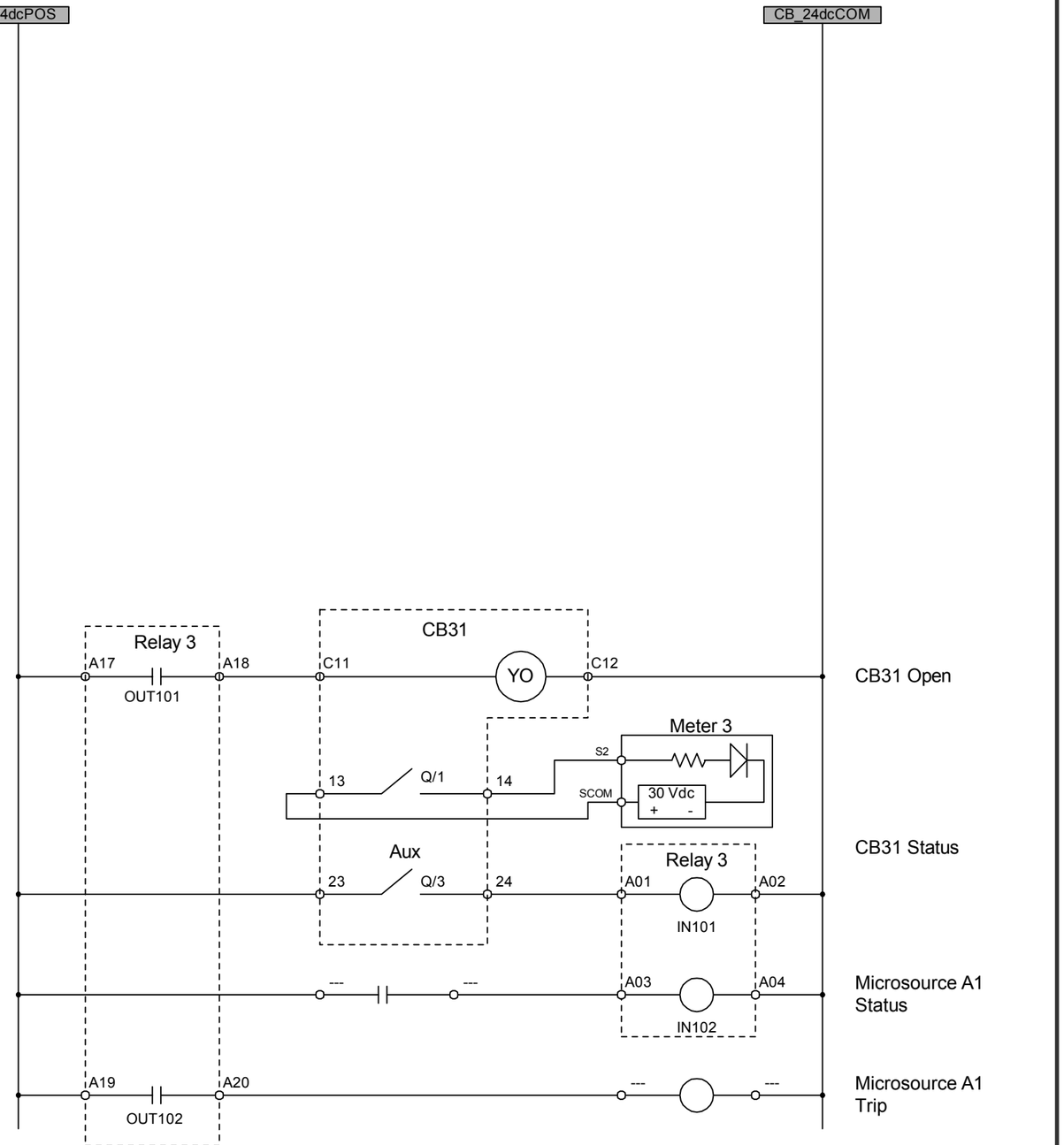

PROPRIETARY AND CONFIDENTIAL INFORMATION

NORTHERN POWER SYSTEMS
182 Mad River Park
Waitsfield, VT 05673
802-496-2955
www.northernpower.com

CERTS Test Bed Schematic - PRELIMINARY
CB Control

Drawn by: Ed Linton	Date: 10/3/2005	PROJ#:	Rev. L
		file: CERTS_Schematic_RevL.vsd	

Figure 21: CERTS Test Bed Schematic - Preliminary - CB Control

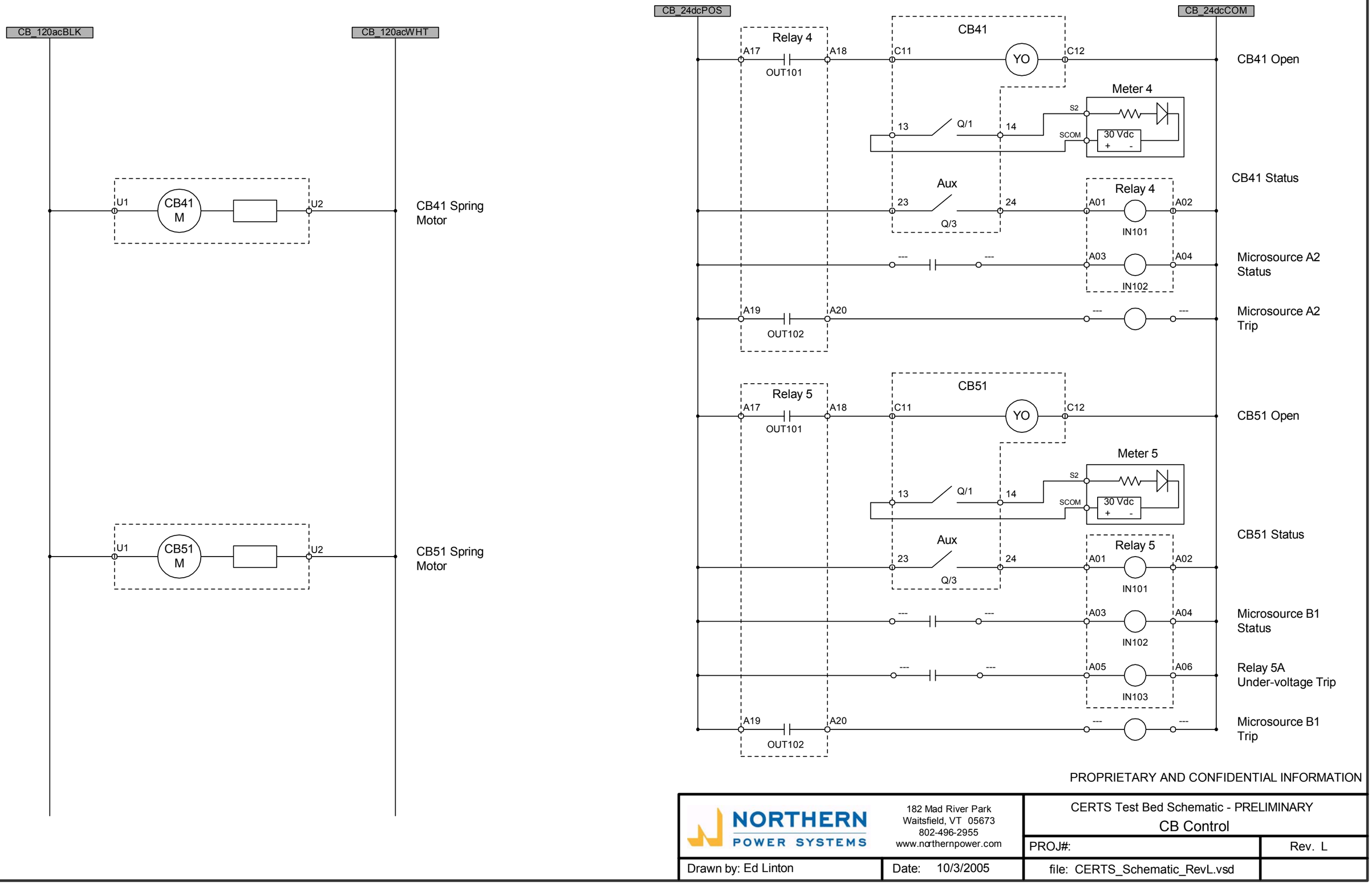

PROPRIETARY AND CONFIDENTIAL INFORMATION

NORTHERN POWER SYSTEMS 182 Mad River Park Waitsfield, VT 05673 802-496-2955 www.northernpower.com	CERTS Test Bed Schematic - PRELIMINARY CB Control	
	PROJ#:	Rev. L
Drawn by: Ed Linton	Date: 10/3/2005	file: CERTS_Schematic_RevL.vsd

Figure 22: CERTS Test Bed Schematic - Preliminary - CB Control

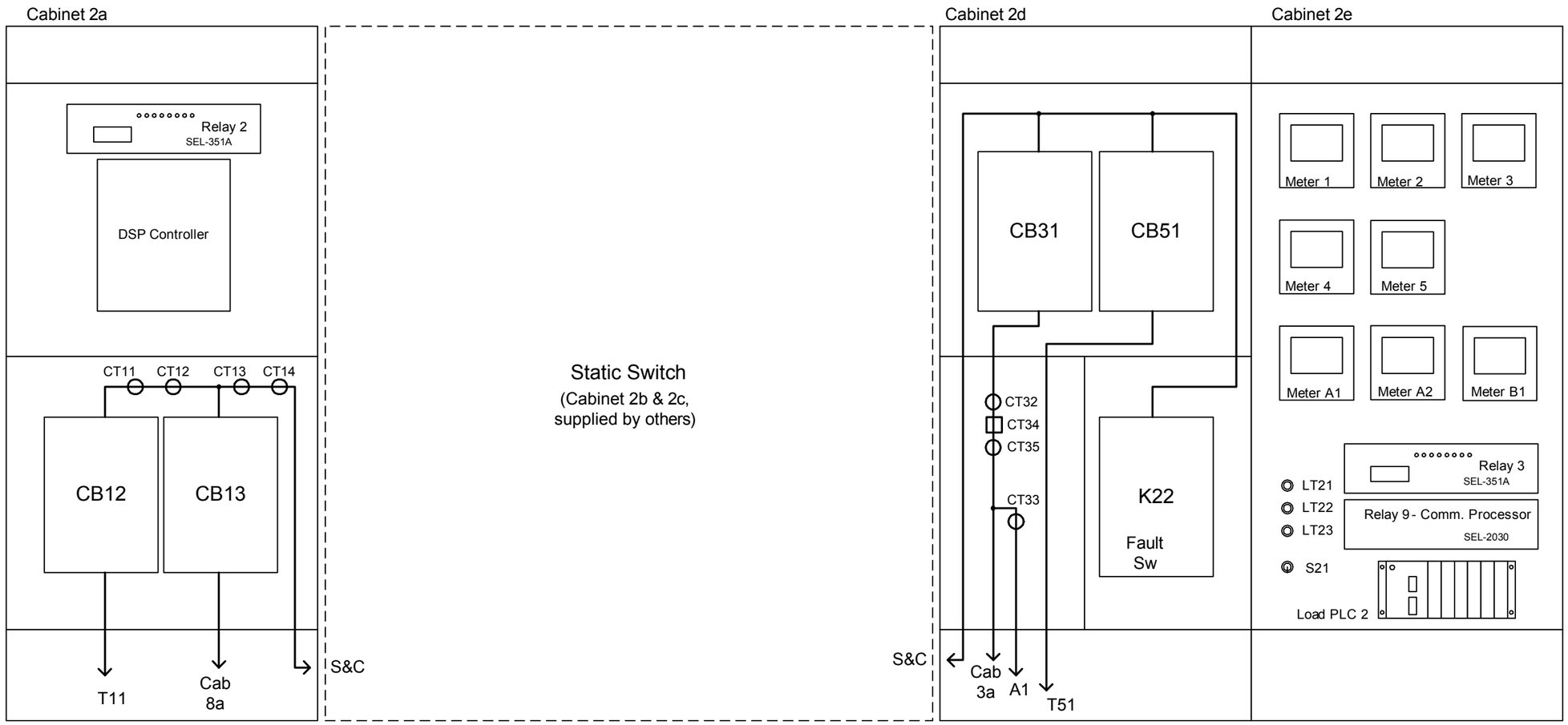

Cabinets also include:

600A bus
- TB11
- TB12
- TB13
- TB14
- PT14
- F14H
- F14X
- F13H
- U2a outlet
- PS2
- FD2

Static switch:
- CB14
- CB16
- CB17

400A bus
- TB32
- TB35
- F35H
- TB33
- F51H
- PT32
- F32H
- F32X
- PT17
- F17H
- F17X

- K23-1,2,3
- K24
- K25
- PS1
- FD1
- Relay 5a
- U2e outlet

10 cm

NORTHERN POWER SYSTEMS 182 Mad River Park Waitsfield, VT 05673 802-496-2955 www.northernpower.com		CERTS Test Bed - Suggested Cabinet Layout
		PROJ#: Rev. E
Drawn by: Ed Linton	Date: 10/3/2005	file: CERTS_Cabinet_Layout_RevE.vsd

Figure 23: CERTS Test Bed - Suggested Cabinet Layout

Similar Cabinets:

5a	5b
7a	7b
8a	8b

Cabinet 4a

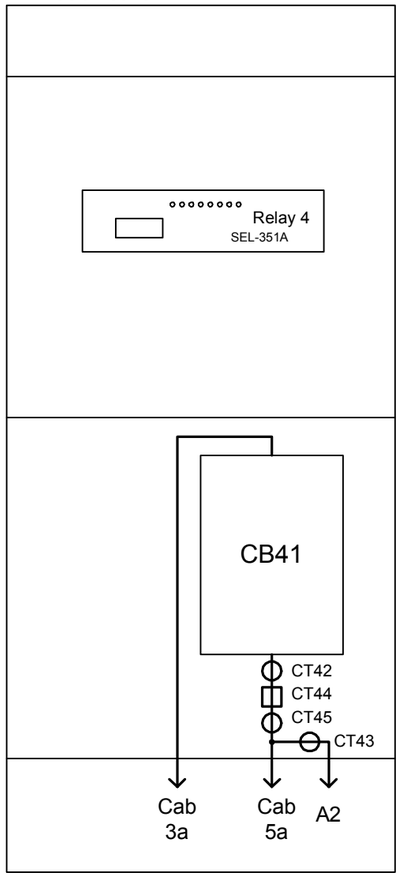

Cabinet 6a

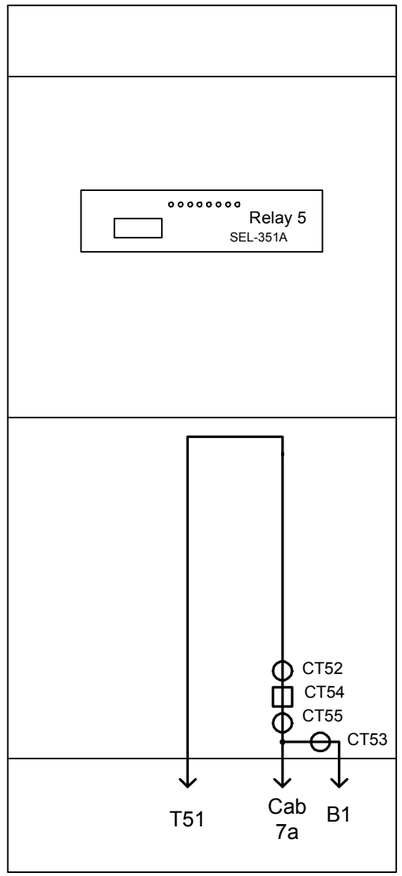

Cabinet 3a

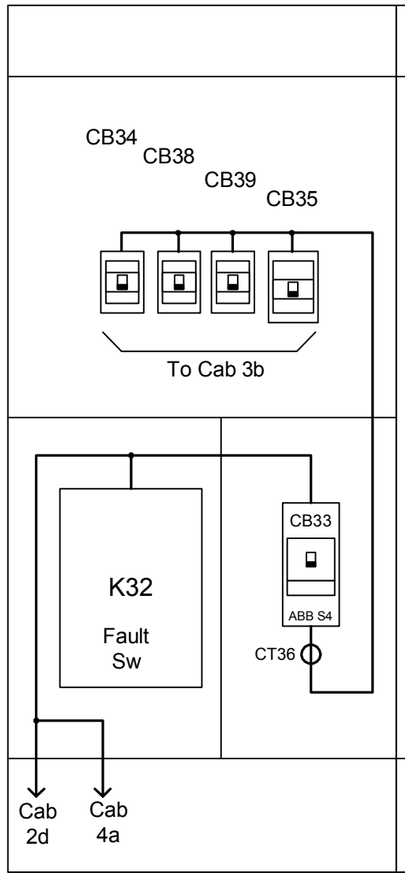

Cabinet 3b

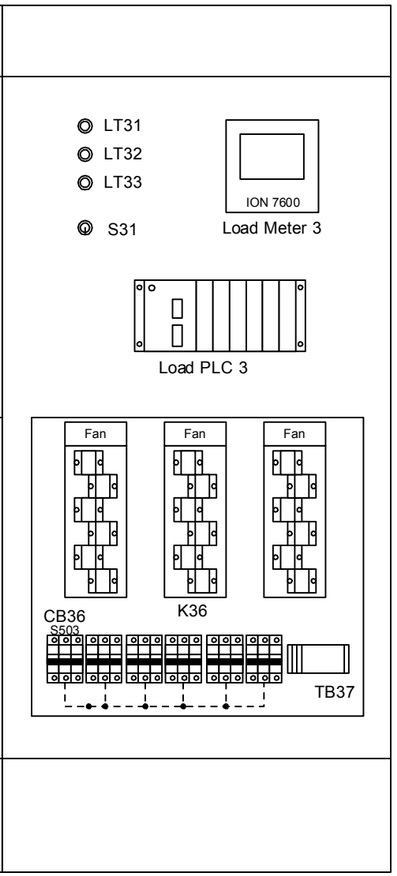

Cabinets also include:

TB42 TB45 F45H TB43 PT42 F42H F42X	225A bus	
TB52 TB55 F55H TB53 PT52 F52H F52X	225A bus	
TB36 F36H J31 K39-2a,b,c	225A bus	FD3 PS3 K38 K37 K33 K34 K39 MS34 J32

10 cm

NORTHERN POWER SYSTEMS
182 Mad River Park
Waitsfield, VT 05673
802-496-2955
www.northernpower.com

CERTS Test Bed - Suggested Cabinet Layout

PROJ#:		Rev. E
Drawn by: Ed Linton	Date: 10/3/2005	file: CERTS_Cabinet_Layout_RevE.vsd

Figure 24: CERTS Test Bed - Suggested Cabinet Layout

Zone 3
Meter 3 (DAS)
Meter A1 (DAS)
CT34
F35H
CT32
PT32
CB31
CT32R
CT35
F35
Feeder A
480 V
4
CT33
75 yard loop
25 yard loop
EMS
Microsource A1
Controller
CB32
T31
Protective Relay 3
Filter
Storage
CB33
Load Meter 3 (DAS)
F36
CT36
Load Bank 3
Fault Load
Zone 4
Meter 4 (DAS)
Meter A2 (DAS)
CT44
F45H
PT24
CT42
CB41
CT42R
CT45
F45
Feeder A
480 V
4
CT43
75 yard loop
EMS
Microsource A2
Controller
CB42
T41
Protective Relay 4
Filter
Storage
CB43
Load Meter 4 (DAS)
F46
CT46
Load Bank 4
Fault Load
Zone 2
Fault Load
CB51
PT17
S&C
CB16
CB17
Static Switch
SS15
EMS
CB14
Protective Relay 2
CT14R
PT14
CT14
CT13
F13
DSP Control
Meter 2
CT12
CT11
Meter 1
CB12
Zone 6
L11
Additional inductor can be added for higher impedance
T11
S11
Zone 1
Utility Interface
PCC - Zone 1
FD10
Optional Transformer for Wye Interface
T51
PT51
Relay 5a
Zone 5
Meter 5 (DAS)
Meter B1 (DAS)
CT54
F55H
PT52
CT52
CT52R
CB13
Feeder C
480 V
4
75 yard loop
CT55
F55
Feeder B
480 V
3
CT53
75 yard loop
EMS
Microsource B1
Controller
CB52
T52
Protective Relay 5
Filter
Storage
CB53
Load Meter 5 (DAS)
F56
CT56
Load Bank 5
Fault Load
CB63
Load Meter 6 (DAS)
F66
CT66
Load Bank 6
Fault Load

PROPRIETARY AND CONFIDENTIAL INFORMATION

NORTHERN POWER SYSTEMS
182 Mad River Park
Waitsfield, VT 05673-0999
802-496-2955
www.northernpower.com

CERTS Test Bed - One-Line Diagram
Power Schematic

PROJ#:
Rev. P

Drawn by: Ed Linton
Date: 10/3/2005
file: CERTS_Test_Bed_RevP.vsd

Figure 25: CERTS Test Bed - One-line Diagram - Power Schematic

Feeder A
480 V

CB31 CT32 CT32R PT32 4 CB32 T32 CB33 Fault Current Zone 3

CB41 CT42 CT42R PT42 CB42 T42 CB43 Fault Current Zone 4

trip 51 50 G 27 p-p trip

Relay 3

Microsource A1

Load Bank Zone 3

Relay 4

Microsource A2

Load Bank Zone 4

Zone 2

Fault Current Zone 2

Relay 2, DSP, and Static Switch Control

PT17

CB16

CB17

EMS

25 close trip

Static Switch SS15

CB14

59 27 p-p 81 O/U

PT14

50 51

CT14

50 G

CT14R

32

CB51 T51

trip 27

Relay 5A

Feeder B
480 V

CT52R CT52 PT52 3 CB52 T52 CB53 Fault Current Zone 5

51 50 G 27 p-p trip

Relay 5

Microsource B1

Load Bank Zone 5

Feeder C
480 V

4

CB13

CB63

Fault Current Zone 6

Load Bank Zone 6

CT12

CB12

T11

(ground fault detection on delta system)

51 27

S11

FD10

Utility Interface PCC - Zone 1

Optional Transformer for Wye Interface

Devices:

52	Vacuum interrupter and manual load-break switch
Static Switch	Back-to back SCR switch

Relay Functions:

25	Synchronization
27 p-p	Undervoltage phase-to-phase
27	Undervoltage
32	Directional power
46	Negative sequence current
47	Negative sequence voltage
50	Instantaneous overcurrent
50 G	Residual current (A+B+C+N) (zero-sequence residual current)
51	Time overcurrent
59	Overvoltage
81 O/U	Over / under frequency

PROPRIETARY AND CONFIDENTIAL INFORMATION

NORTHERN POWER SYSTEMS
182 Mad River Park
Waitsfield, VT 05673-0999
802-496-2955
www.northernpower.com

CERTS Test Bed - One-Line Diagram
Protection Schematic

PROJ#:

Rev. P

Drawn by: Ed Linton

Date: 10/3/2005

file: CERTS_Test_Bed_RevP.vsd

Figure 26: CERTS Test Bed - One-line Diagram - Protection Schematic

CB

CT

Load
Meter
(DAS)
Ser

DAS Trigger

DAS Ethernet

DC Power
Supply

Electronic Load
with DC voltage
monitor

Motor Starter
/ Protector

Torque sensor

Mechanical
Load

Asynchronous Motor
Load 15 HP
(Load Bank 3 only)

Diode Bridge

Harmonic load
0 - 15 kW
(moveable to any load bank)

Zero-crossing
SSR array

Main Load Array
0 - 95 kW, 0-60 kVAR
(all load banks)

Load
Control
PLC

DAS RS-485

PROPRIETARY AND CONFIDENTIAL INFORMATION

NORTHERN POWER SYSTEMS
182 Mad River Park
Waitsfield, VT 05673-0999
802-496-2955
www.northernpower.com

CERTS Test Bed - One-Line Diagram
Load Bank Schematic

PROJ#:

Rev. P

Drawn by: Ed Linton

Date: 10/3/2005

file: CERTS_Test_Bed_RevP.vsd

Figure 27: CERTS Test Bed - One-line Diagram - Load Bank Schematic

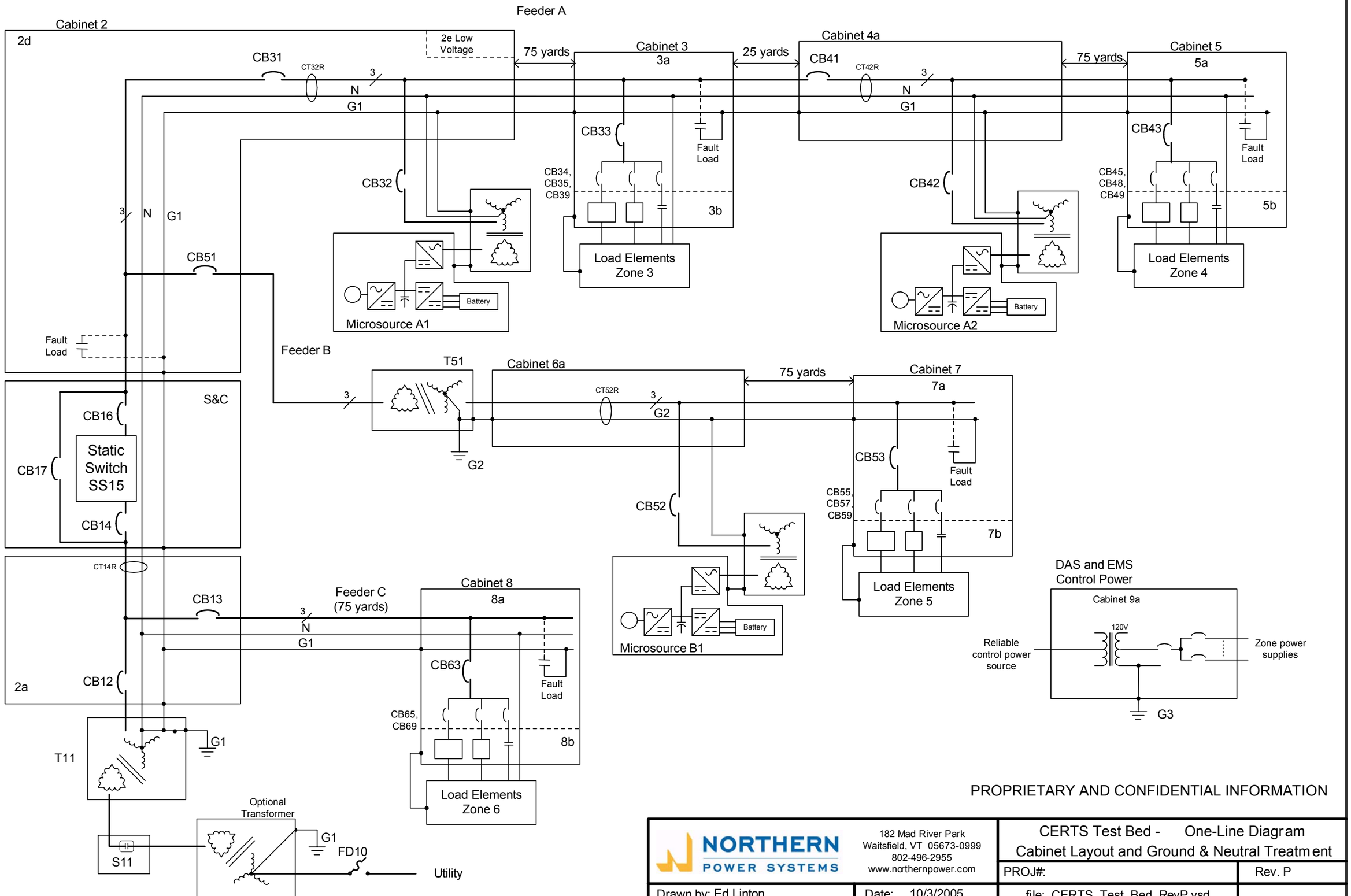

PROPRIETARY AND CONFIDENTIAL INFORMATION

NORTHERN POWER SYSTEMS 182 Mad River Park Waitsfield, VT 05673-0999 802-496-2955 www.northernpower.com	CERTS Test Bed - One-Line Diagram Cabinet Layout and Ground & Neutral Treatment	
	PROJ#:	Rev. P
Drawn by: Ed Linton	Date: 10/3/2005	file: CERTS_Test_Bed_RevP.vsd

Figure 28: CERTS Test Bed - One-line Diagram - Cabinet Layout and Ground & Neutral Treatment

Trigger Circuit

Hardware Interface

DAS PC

Ethernet Hub

Meter 1

Meter 2

Meter A1

Meter A2

Meter B1

Meter 3

Meter 4

Meter 5

Load Meter 3

Load Meter 4

Load Meter 5

Load Meter 6

Relay Comm. Processor

Optional connection for relay event data

RS-485

Zone 2 Load Control PLC

Zone 3 Load Control PLC

Zone 4 Load Control PLC

Zone 5 Load Control PLC

Zone 6 Load Control PLC

EMS PC

RS-232

Relay Comm. Processor

RS-232

Relay 2

RS-485

Microsource A1 Control

Microsource A2 Control

Microsource B1 Control

DSP Control

S&C Static Switch Control

PROPRIETARY AND CONFIDENTIAL INFORMATION

NORTHERN POWER SYSTEMS

182 Mad River Park
Waitsfield, VT 05673-0999
802-496-2955
www.northernpower.com

CERTS Test Bed - One-Line Diagram
DAS and EMS Communications Architecture

PROJ#:

Rev. P

Drawn by: Ed Linton

Date: 10/3/2005

file: CERTS_Test_Bed_RevP.vsd

Figure 29: CERTS Test Bed - One-line Diagram - DAS and EMS Communications Architecture